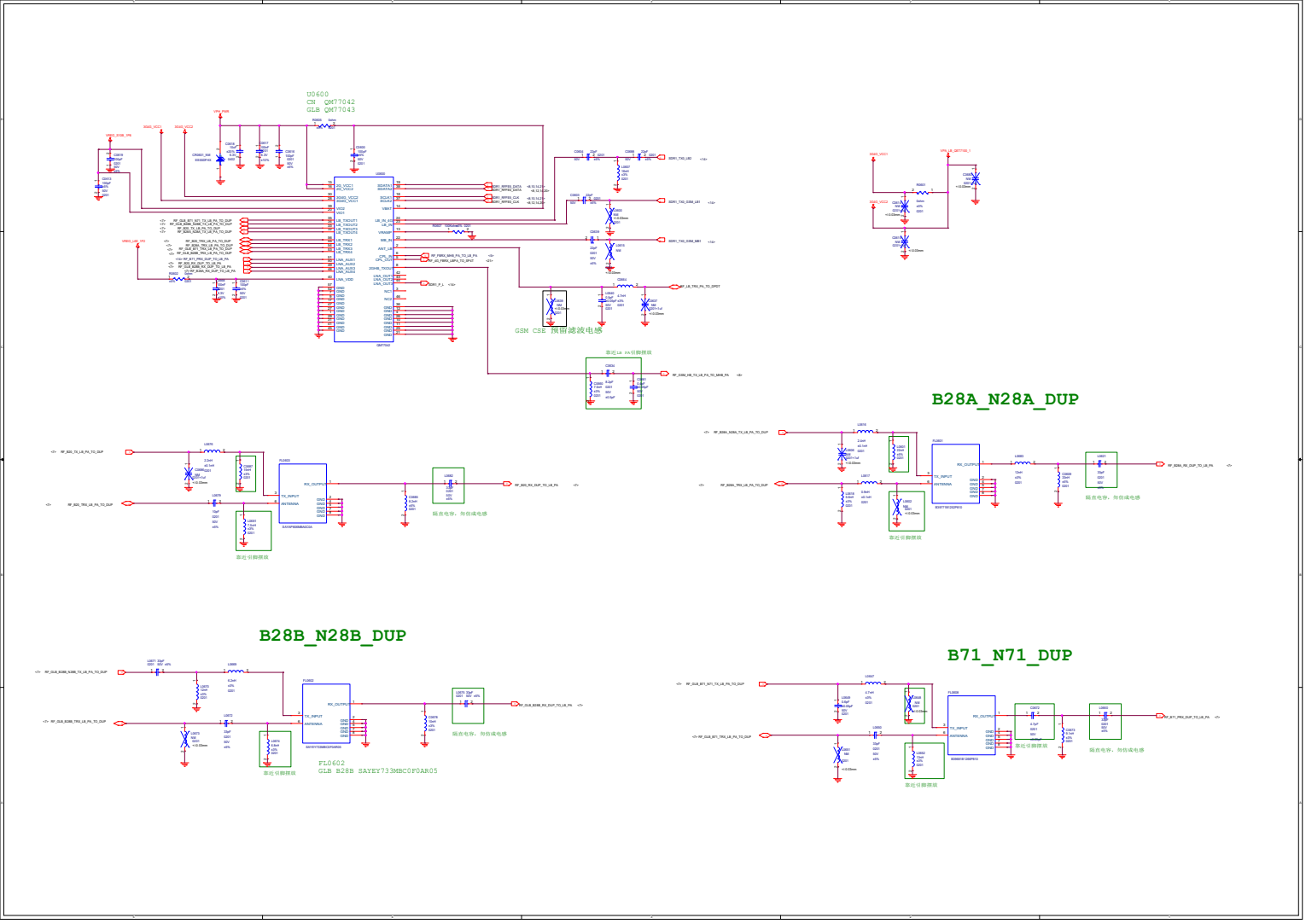
U0600
CN QM77042
GLB QM77043
GSM C2E 预留滤波电感
靠近LB PA引脚摆放
B28A_N28A_DUP
靠近引脚摆放
隔直电容，防仿真电感
B28B_N28B_DUP
FL0602
GLB B28B SAYEY733MBC0P0AR05
B71_N71_DUP

Title	L12_MAIN	
Size A3	Document Number CONTENT	Rev P0
Date: Tuesday, October 11, 2022	Sheet 1 of 78	

ANT1_LB

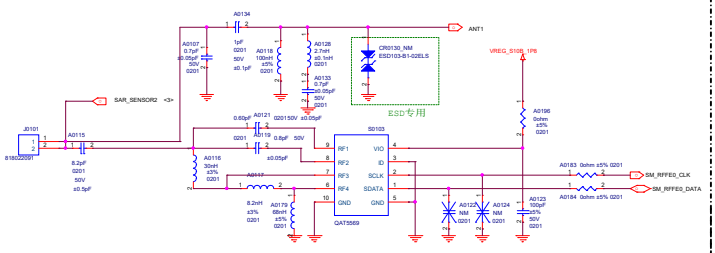

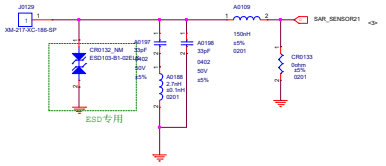

ANT3_MHB

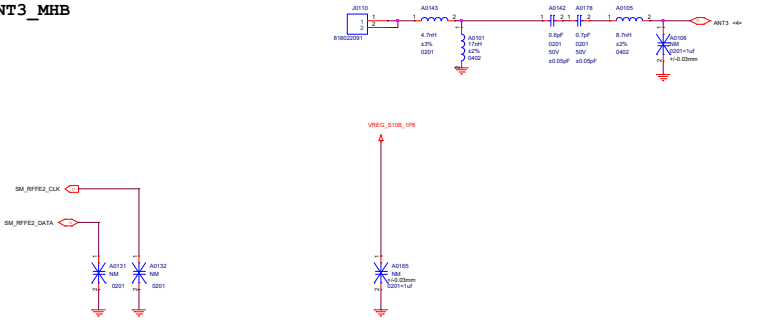

ANT4_MHB_N77

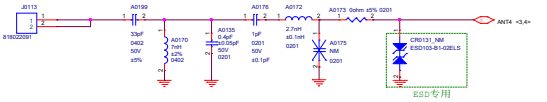

螺丝垫片

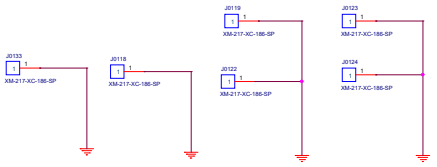

线卡

ANT8_N77

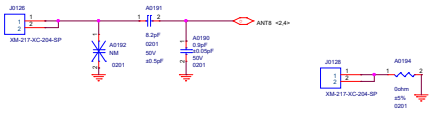

DECO 接地

主板接地

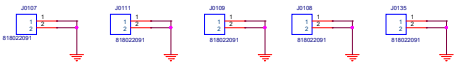

Title: 8550		
Size: A2	Document Number: ANT1	Rev: P0
Date: Tuesday, October 11, 2022	Sheet 1 of 79	

ANT16 GPSL1+WiFi2.4_CH0

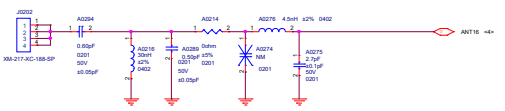

ANT6 WIFI5G+N77

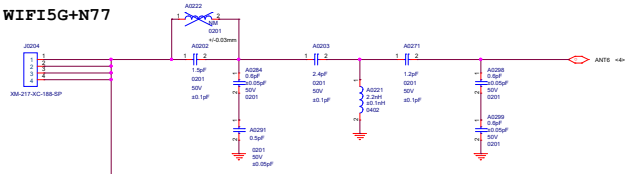

ANT17 L5

SAR Sensor2

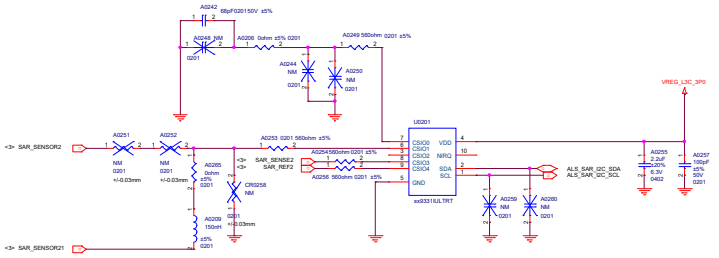

ANT7 WIFI 2.4G_chain1+N77

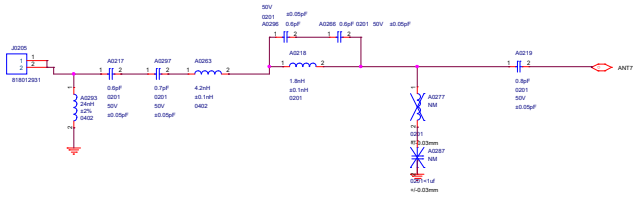

ANT18 WIFI 5G_Chain1

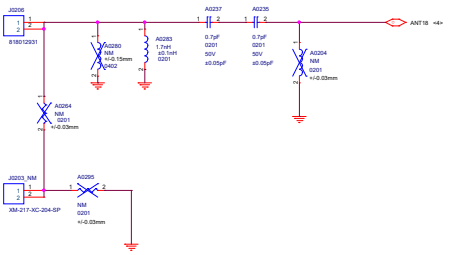

ANT2_MHB

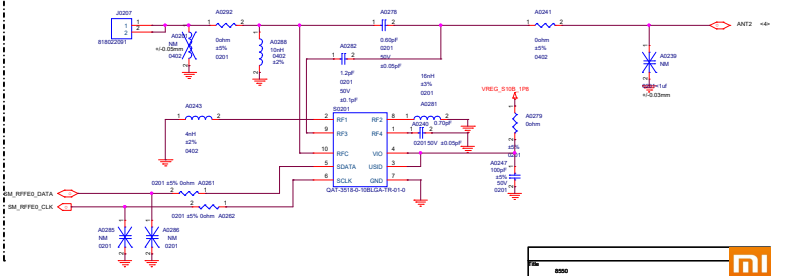

File: 8550			
Size: A2	Document Number: ANT2		Rev: P0
Date: Tuesday, October 11, 2022	Sheet 2 of 79		

ANT0

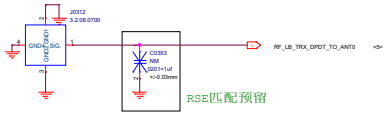

ANT1

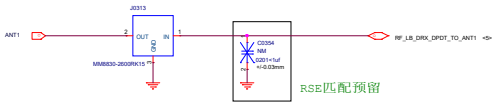

ANT2

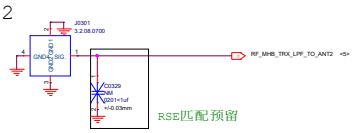

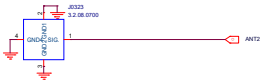

ANT3

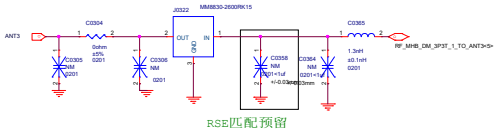

ANT4

ESD专用

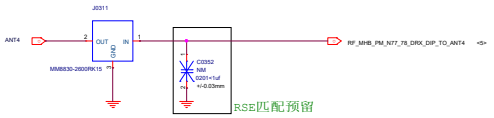

ANT5

ANT6
WIFI6E_CH0+N78_2

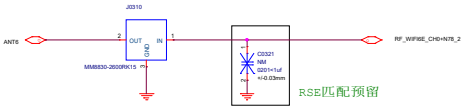

ANT7
WIFI_CHAIN1_2G+N78_2

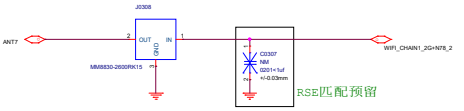

ANT8

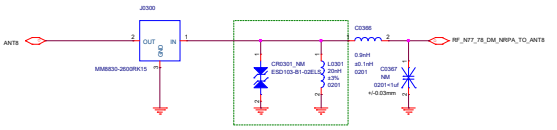

基带ESD防护电路

WIFI+GPS

ANT16 GPS L1+WIFI2.4 CHAIN0

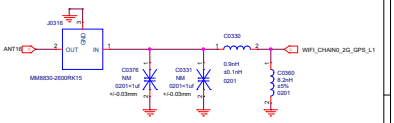

ANT17 L5

ANT18 RF_WIFI6E_CH1

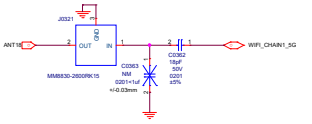

Title: 8550			
Size: A2	Document Number: RF CONN		Rev: P0
Date: Tuesday, October 11, 2022	Sheet 3 of 79		

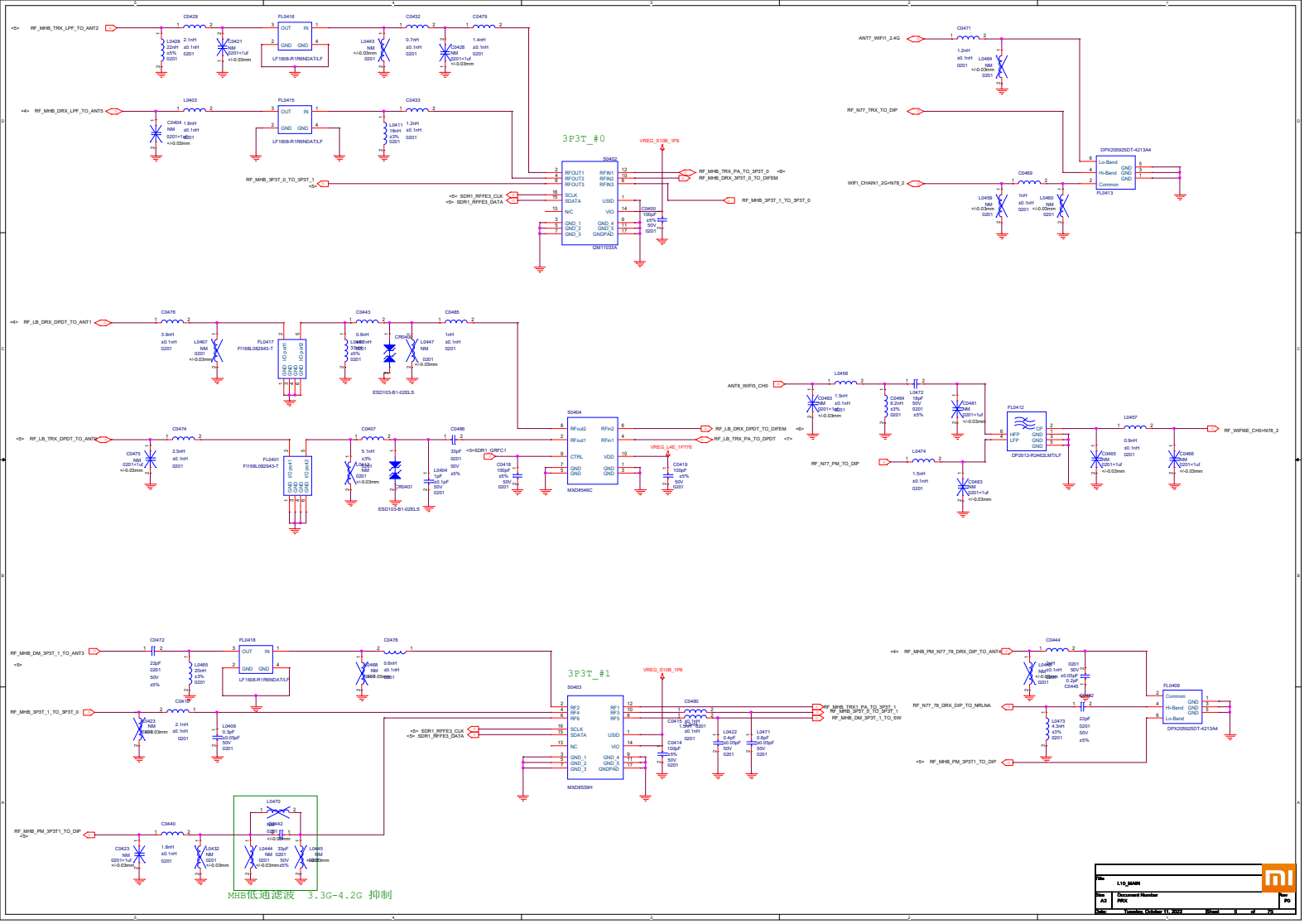
3P3T_#0
3P3T_#1
MHB低通滤波 3.3G-4.2G 抑制
RF_MHB_LPF_TO_ANT2
RF_MHB_DRX_LPF_TO_ANT5
RF_MHB_3P3T_0_TO_3P3T_1
RF_MHB_TRX_PA_TO_3P3T_0
RF_MHB_DRX_3P3T_0_TO_DIFEM
RF_MHB_3P3T_1_TO_3P3T_0
ANT7_WIFI1_2.4G
RF_N77_TRX_TO_DIP
WIFI_CHAIN1_2G+N78_2
RF_LB_DRX_DPDT_TO_ANT1
RF_LB_DRX_DPDT_TO_ANT6
ANT6_WIFI5_CH0
RF_LB_DRX_DPDT_TO_DIFEM
RF_LB_TRX_PA_TO_DPDT
RF_N77_PM_TO_DIP
RF_WIFI6E_CH0+N78_2
RF_MHB_DM_3P3T_1_TO_ANT3
RF_MHB_3P3T_1_TO_3P3T_0
RF_MHB_PM_3P3T1_TO_DIP
RF_MHB_PM_N77_78_DRX_DIP_TO_ANT6
RF_N77_78_DRX_DIP_TO_NRLNA
RF_MHB_PM_3P3T1_TO_DIP
RF_MHB_TRX1_PA_TO_3P3T_1
RF_MHB_3P3T_0_TO_3P3T_1
RF_MHB_DM_3P3T_1_TO_SW
SDR1_RFFE3_CLK
SDR1_RFFE3_DATA
SDR1_GRFC1
VREG_S10B_1P8
VREG_L4E_1P776
QM11033A
MXD8546C
MXD8539H
LF1608-R1R8NDATILF
DPX205925DT-4213A4
DP2012-R2462LMTLF
ESD103-B1-02ELS
Title: L10_MAIN
Size: A2
Document Number: PR5K
Rev: P0
Date: Tuesday, October 11, 2022
Sheet 9 of 25

B20_28_DRX_SAW

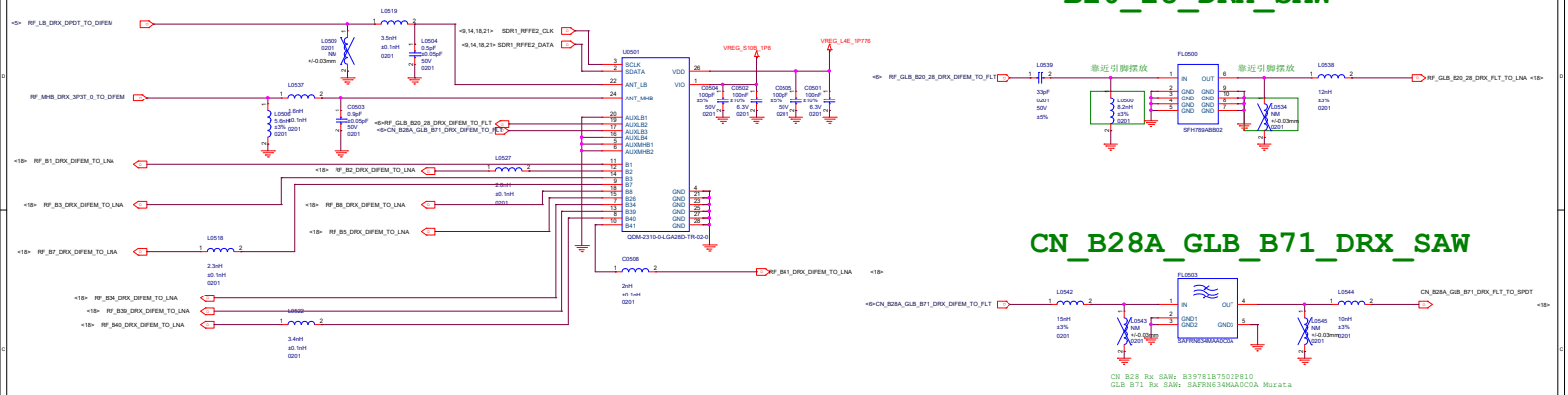

CN_B28A_GLB_B71_DRX_SAW

CN B28 Rx SAW: B39781B7502P810
GLB B71 Rx SAW: SAFRN634MAA0C0A Murata

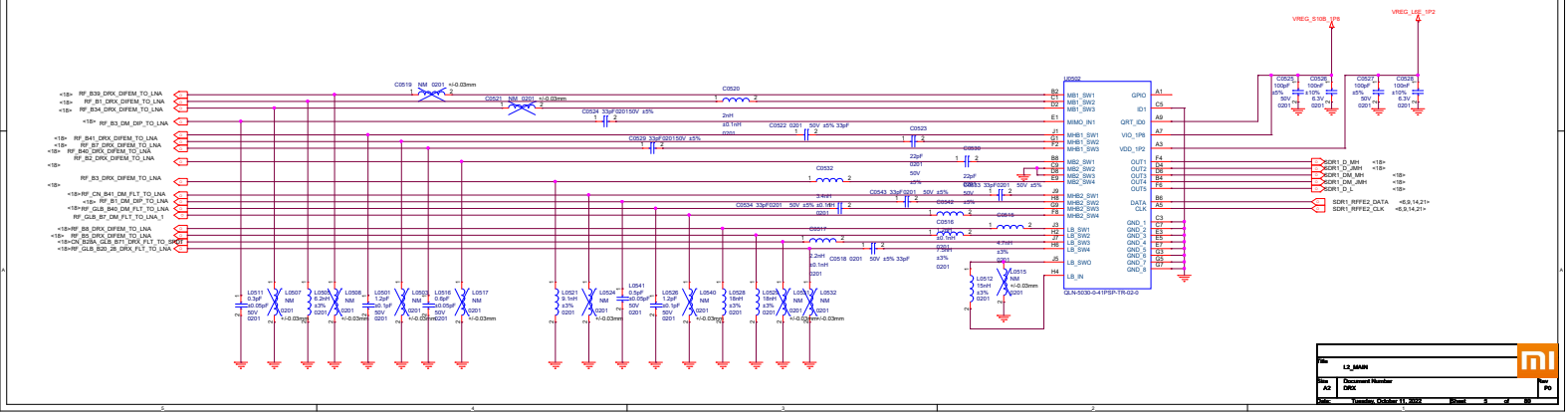

Title	L3_MAIN
Size	A2
Document Number	DRX
Rev	P0
Date:	Tuesday, October 11, 2022
Sheet	5 of 88

MHB S-PAD

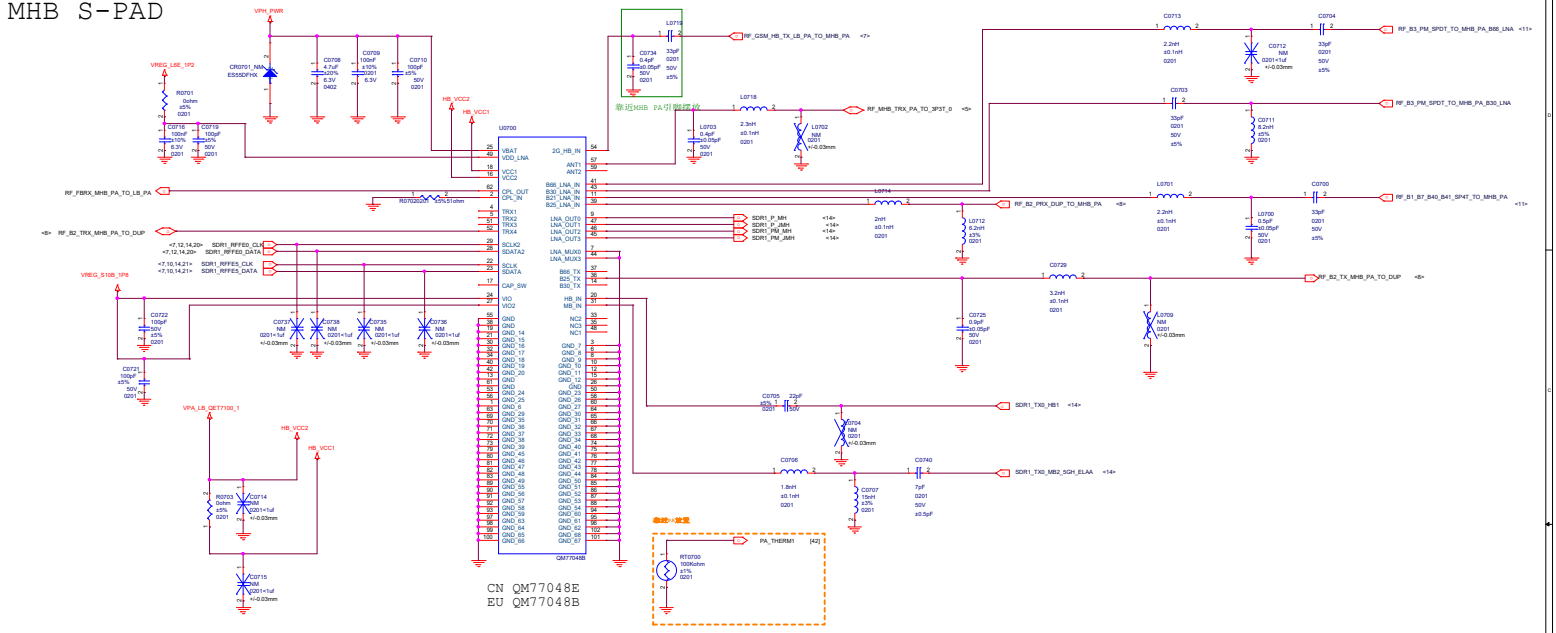

B2_TRX_DUP

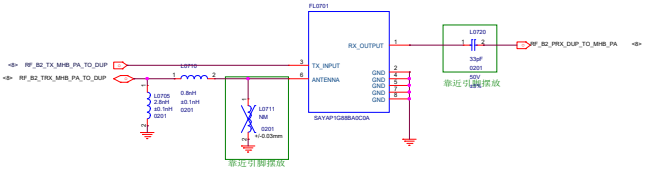

Title	L10_MAIN		
Size	Document Number		Rev
A2	MHB PA		P0
Date:	Tuesday, October 11, 2022	Sheet 8 of 25	

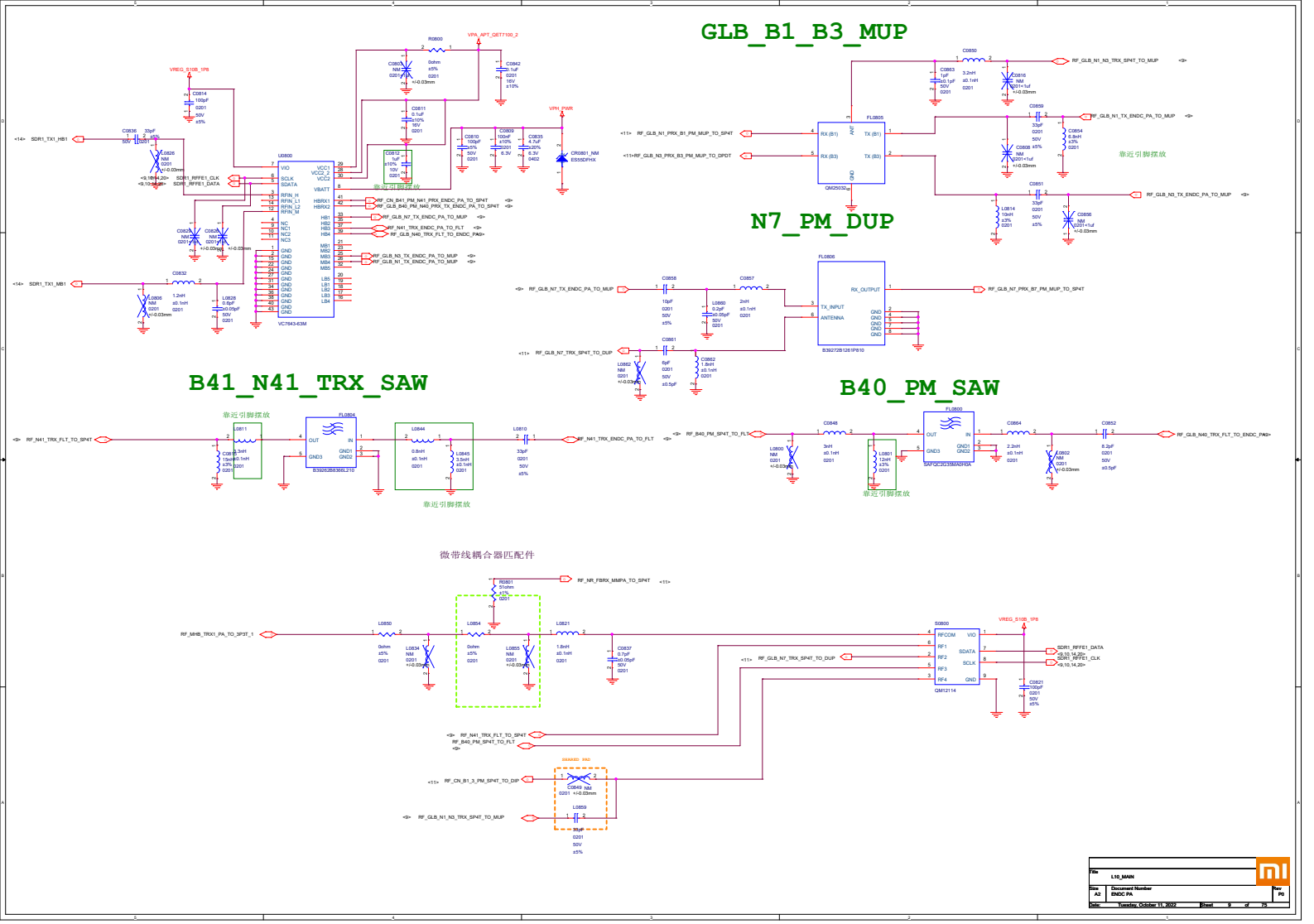

Title	L10_MAIN
Size A2	Document Number ENDC PA
Rev P0	
Date: Tuesday, October 11, 2022	Sheet 9 of 75

QET7100_1

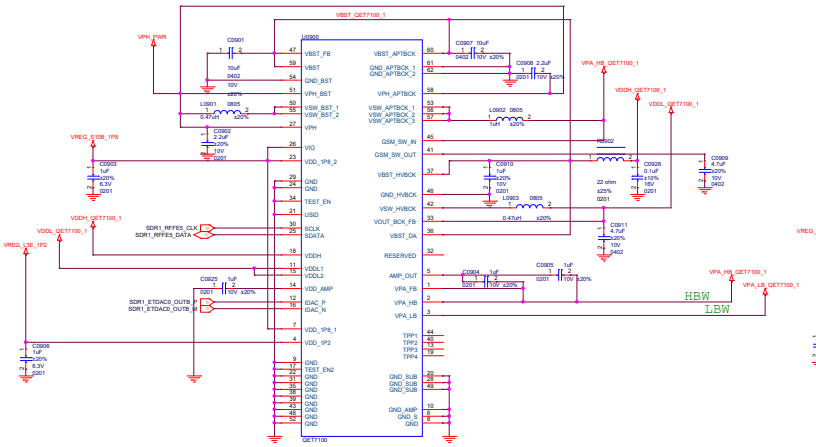

QET7100_2

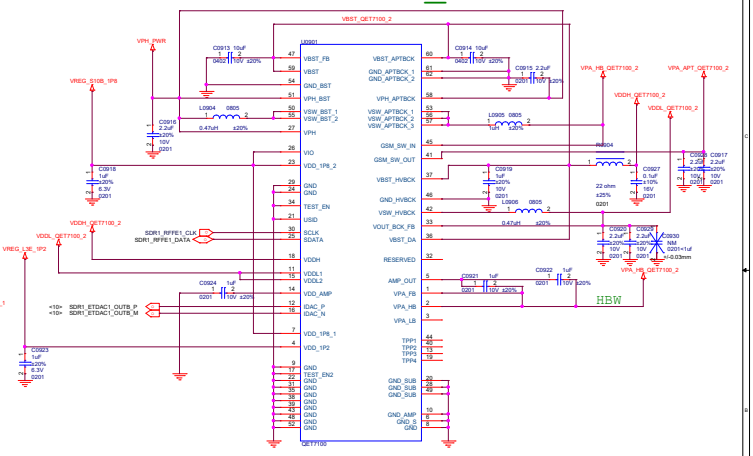

Title: L10_MAIN			
Size: A2	Document Number: RF DC-DC		Rev: P0
Date: Tuesday, October 11, 2022	Sheet 10 of 75		

B1_B3_PM_DIP

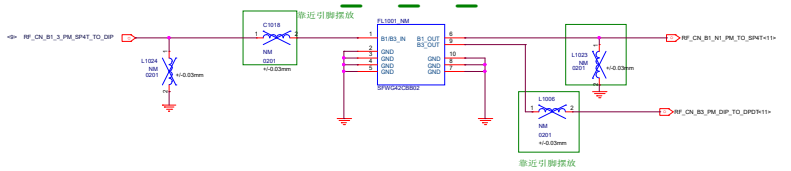

B3_PM_SPDT

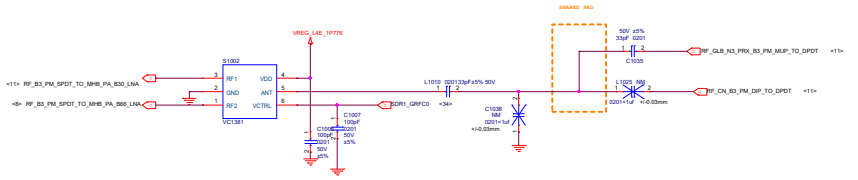

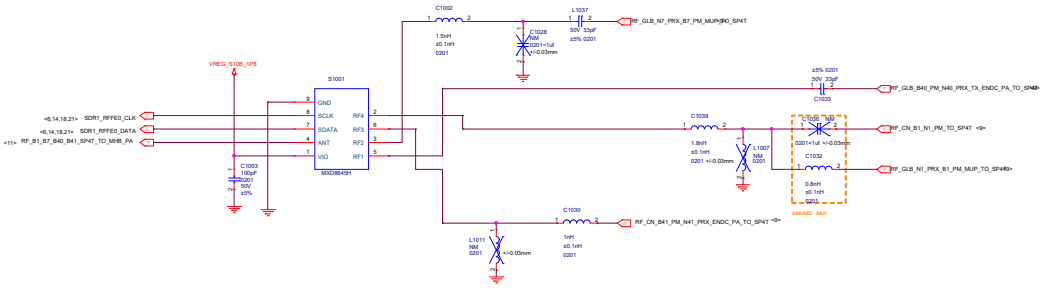

Title:	L10_MAIN	
Size: A2	Document Number: PRX MAIN	Rev: P0
Date: Tuesday, October 13, 2022	Sheet 11 of 28	

B7_DM_SAW

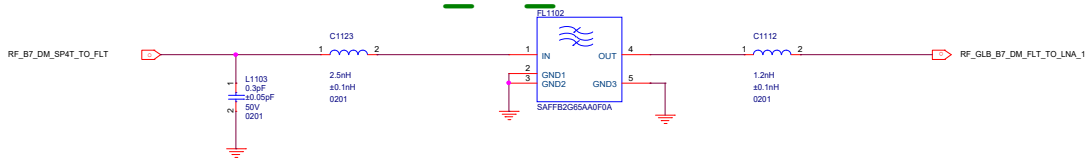

B40_DM_SAW

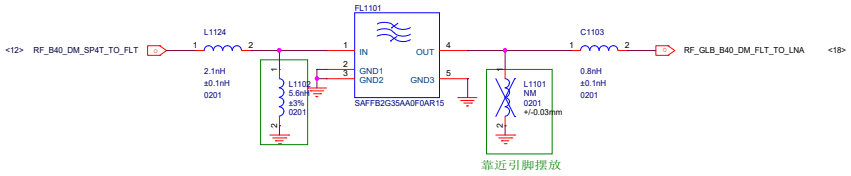

B1_B3_B41_DM_TRI_SAW

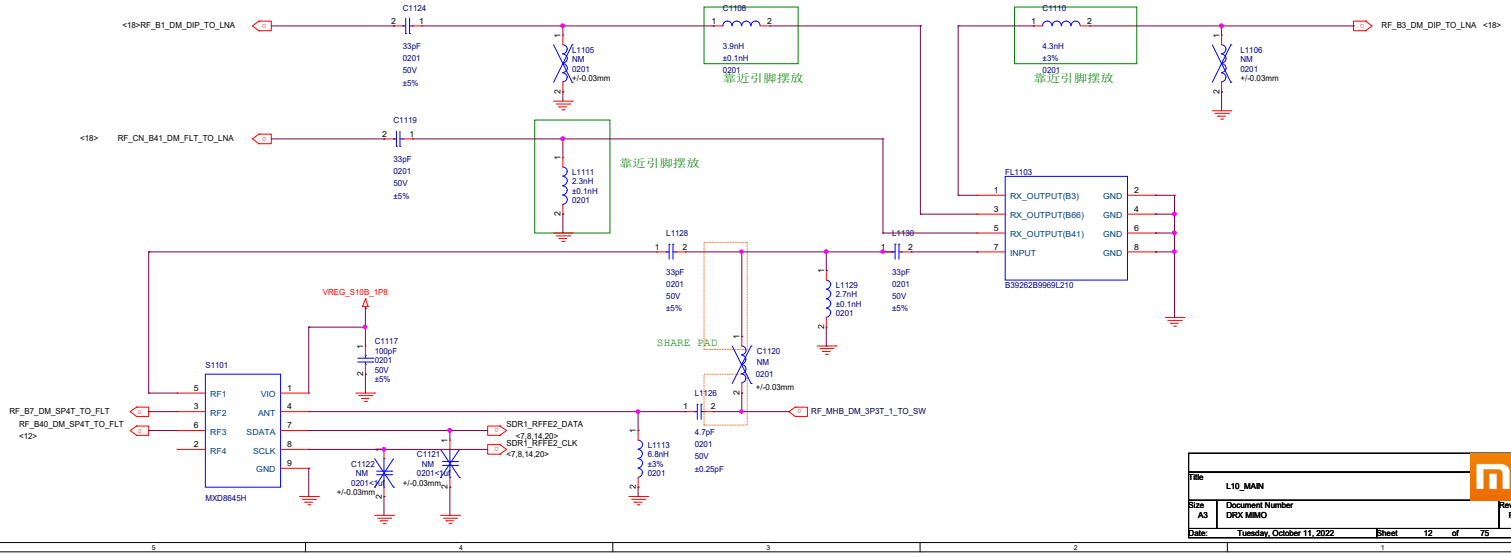

Title	L10_MAIN	
Size A3	Document Number DRX MIMO	Rev P0
Date: Tuesday, October 11, 2022	Sheet 12 of 75	

Title	L10_MAIN	
Size A3	Document Number Reserved(for LNA)	Rev P0
Date: Tuesday, October 11, 2022	Sheet 13 of 75	

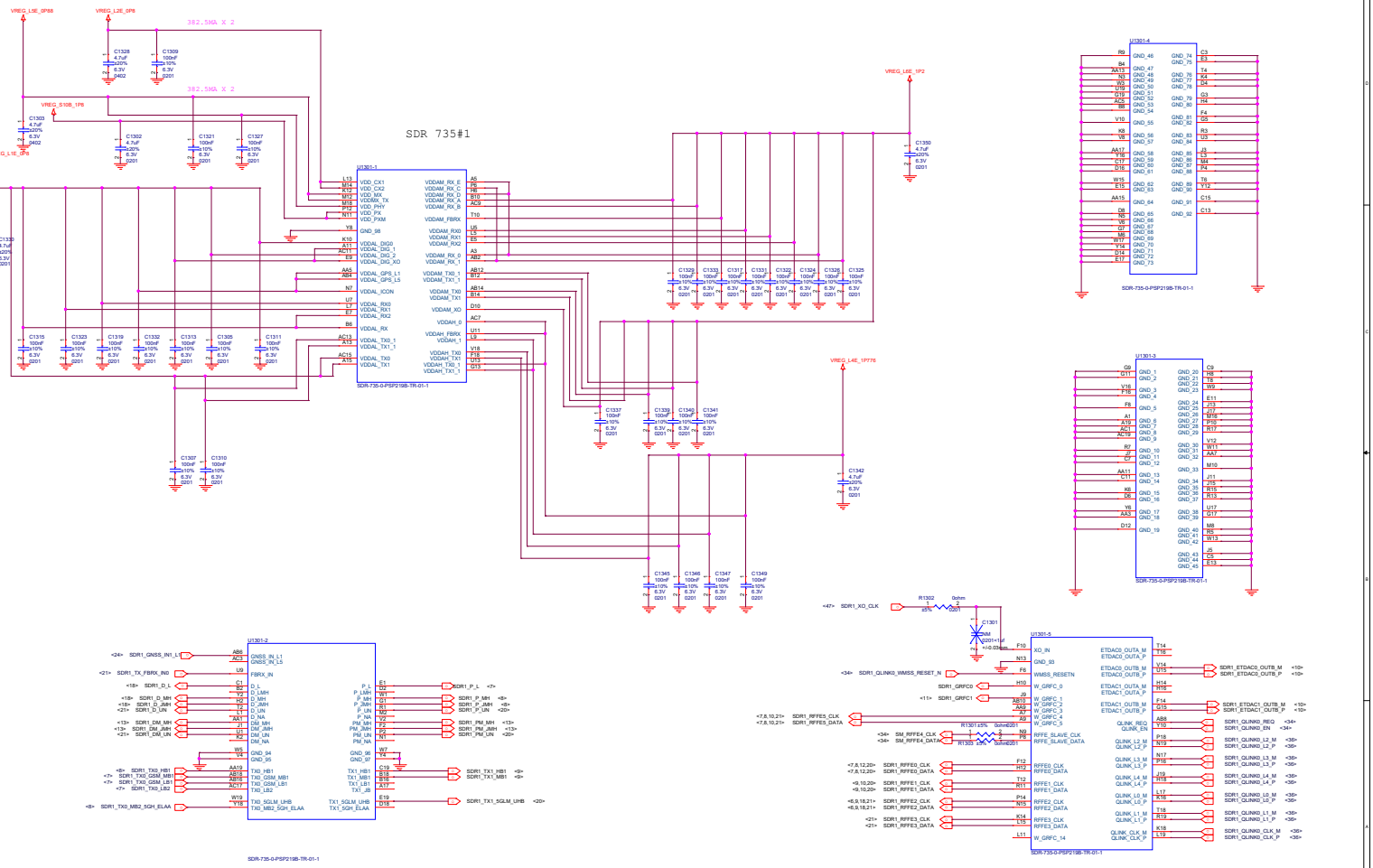

Title	M11_MAIN		
Size A2	Document Number WTR SDM735-1		Rev P0
Date: Tuesday, October 11, 2022	Sheet 14 of 75		

Title:	L10_MAIN
Size: A2	Document Number: WYN SGM750-2
Rev: P0	
Date: Tuesday, October 11, 2022	Sheet 18 of 75

Title	L10_MAIN	
Size A3	Document Number Reserved(for WTR)	Rev P0
Date: Tuesday, October 11, 2022	Sheet 16 of 75	

Title:	L10_MAIN
Size: A2	Document Number: Reserved(for 5G-sub 6G)
Rev: P0	
Date: Tuesday, October 11, 2022	Sheet 17 of 75

File:	L10_MAIN
Size: A2	Document Number: Reserved(for MM Wave)
Rev: P0	
Date: Tuesday, October 11, 2022	Sheet 18 of 75

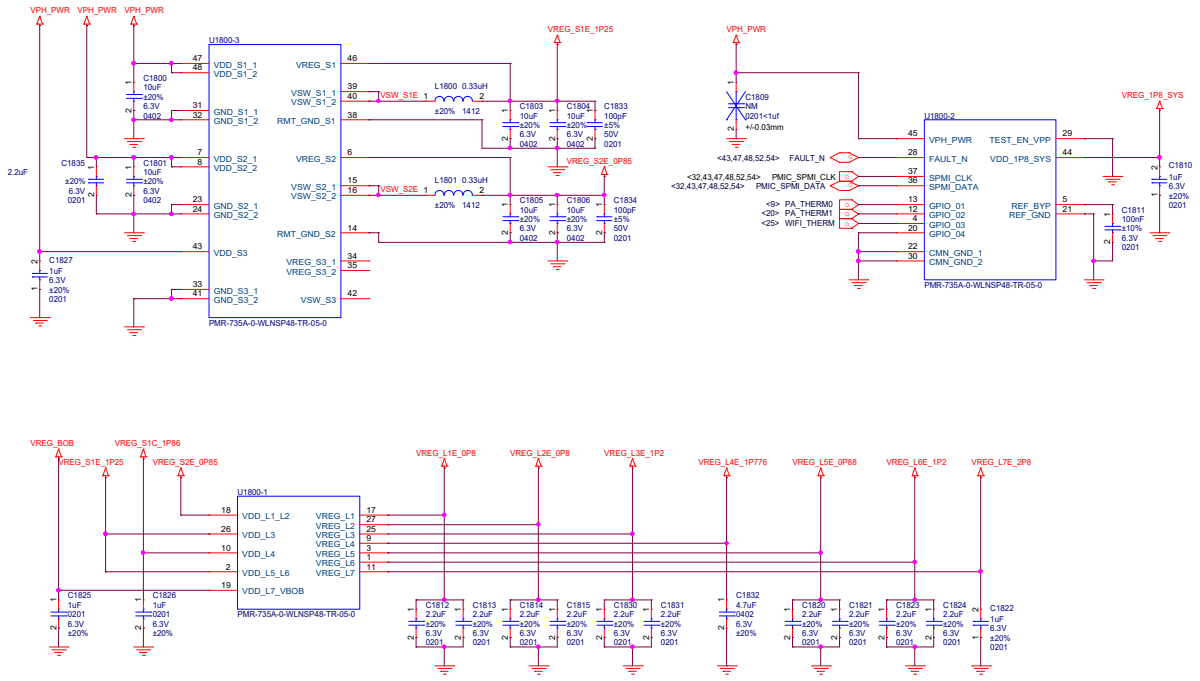

Title	L12_MAIN	
Size A3	Document Number PMR735A	Rev P0
Date: Tuesday, October 11, 2022	Sheet 19 of 78	

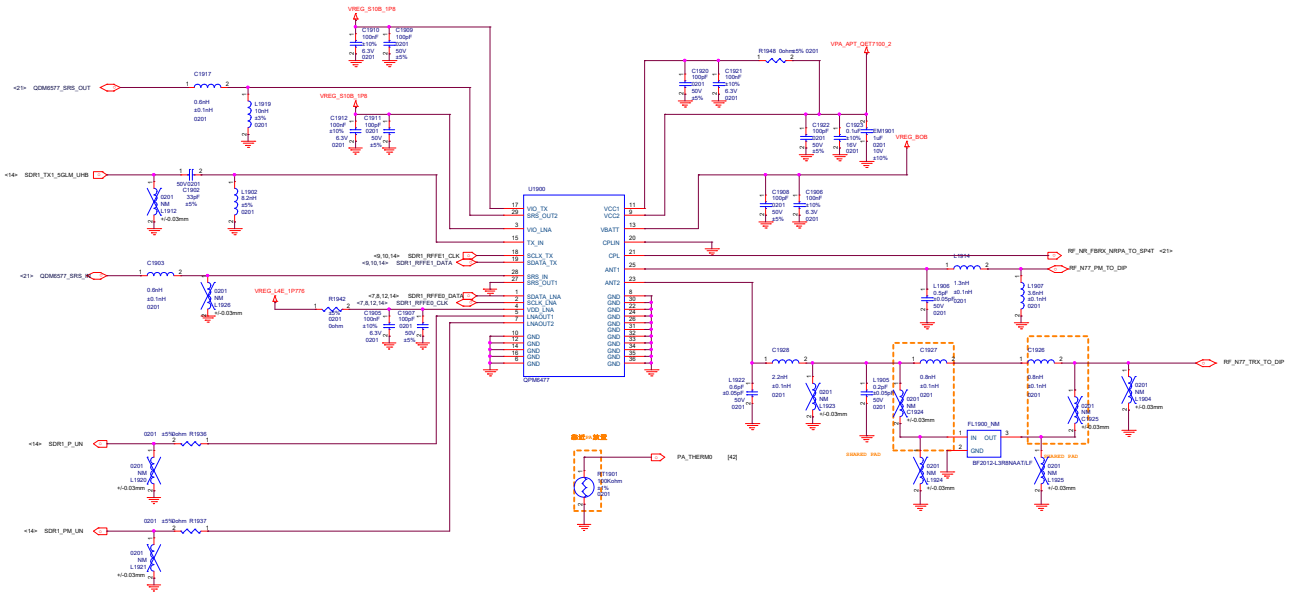

Title	L10_MAIN		
Size A2	Document Number 5G N77 N78		Rev P0
Date: Tuesday, October 11, 2022	Sheet 20 of 79		

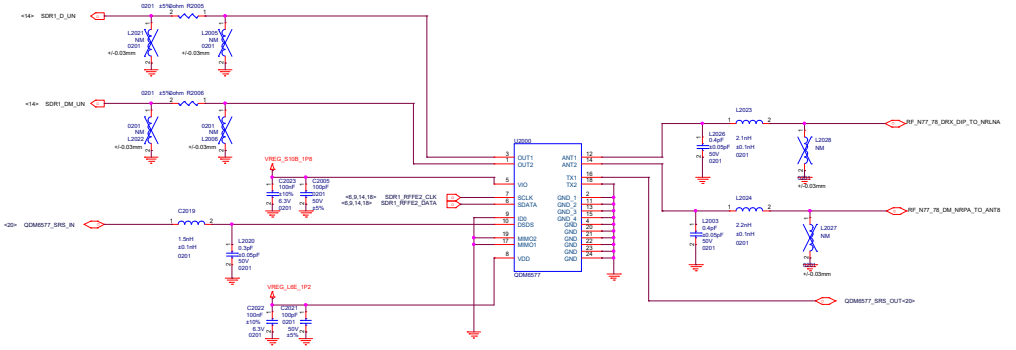

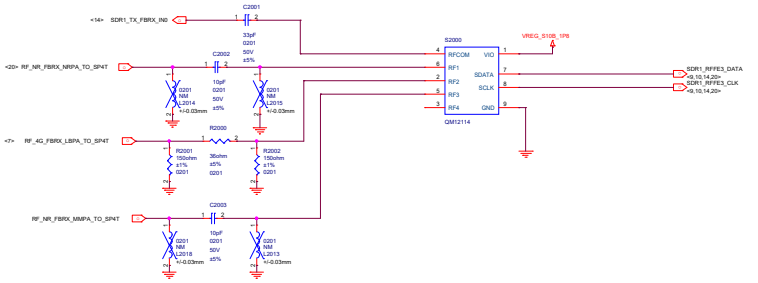

Title:	L10_MAIN		
Size: A2	Document Number: 5G N77 N78 MIMO		Rev: P0
Date: Tuesday, October 11, 2022	Sheet 21 of 75		

WIFI 2.4G CHAIN0

Title:	L12_MAIN	
Size: A2	Document Number: RF_INTERPOSER	Rev: P0
Date: Tuesday, October 11, 2022	Sheet 22 of 78	

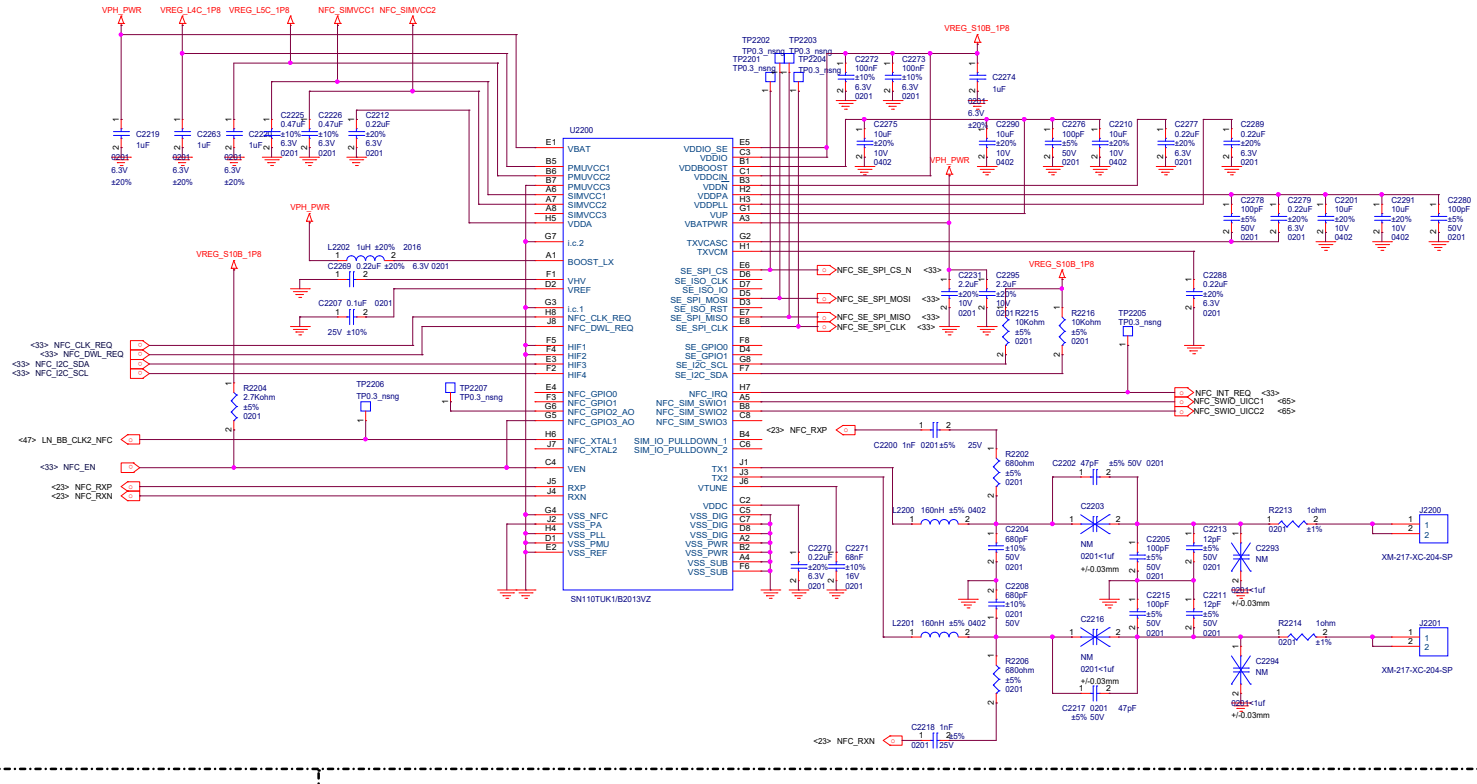

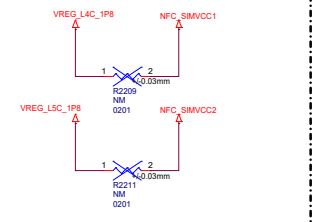

ESIM

Title	L12_MAIN	
Size: Custom	Document Number: NFC	Rev: P0
Date: Tuesday, October 11, 2022	Sheet 23 of 78	

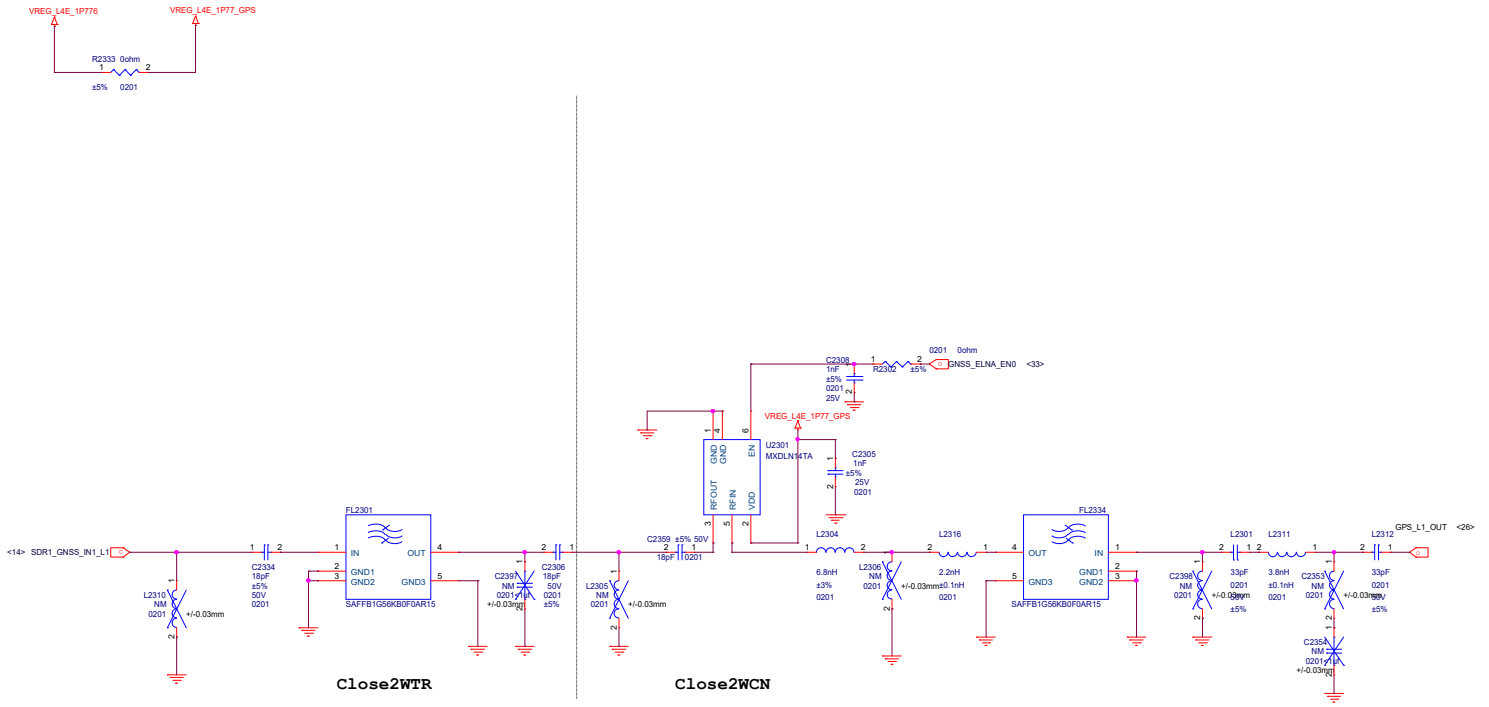

Title	L12_MAIN
Size A3	Document Number GPS
Rev	P0
Date: Tuesday, October 11, 2022	Sheet 24 of 78

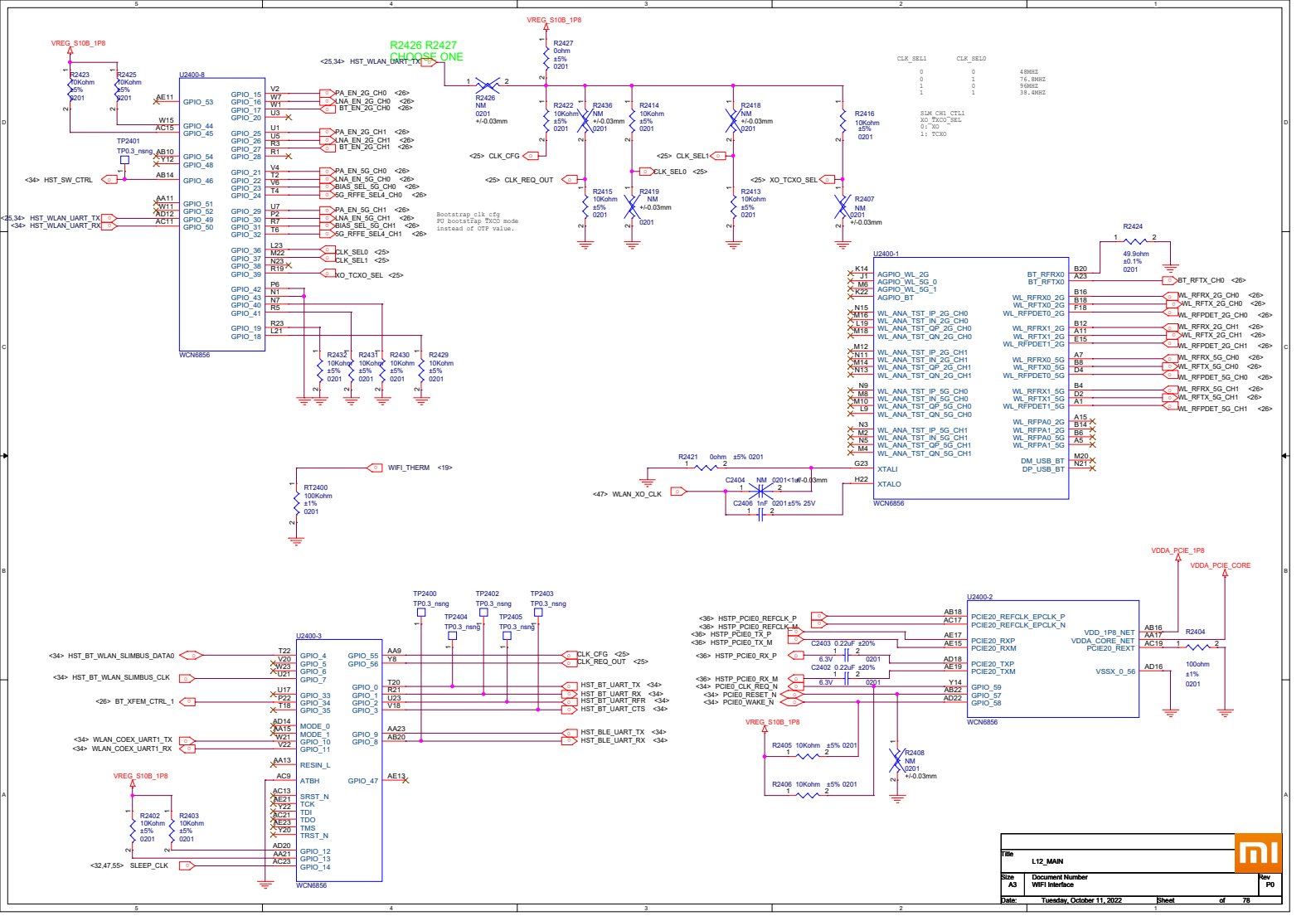

Title	L12_MAIN		
Size A3	Document Number WIFI Interface		Rev P0
Date: Tuesday, October 11, 2022	Sheet	of 78	

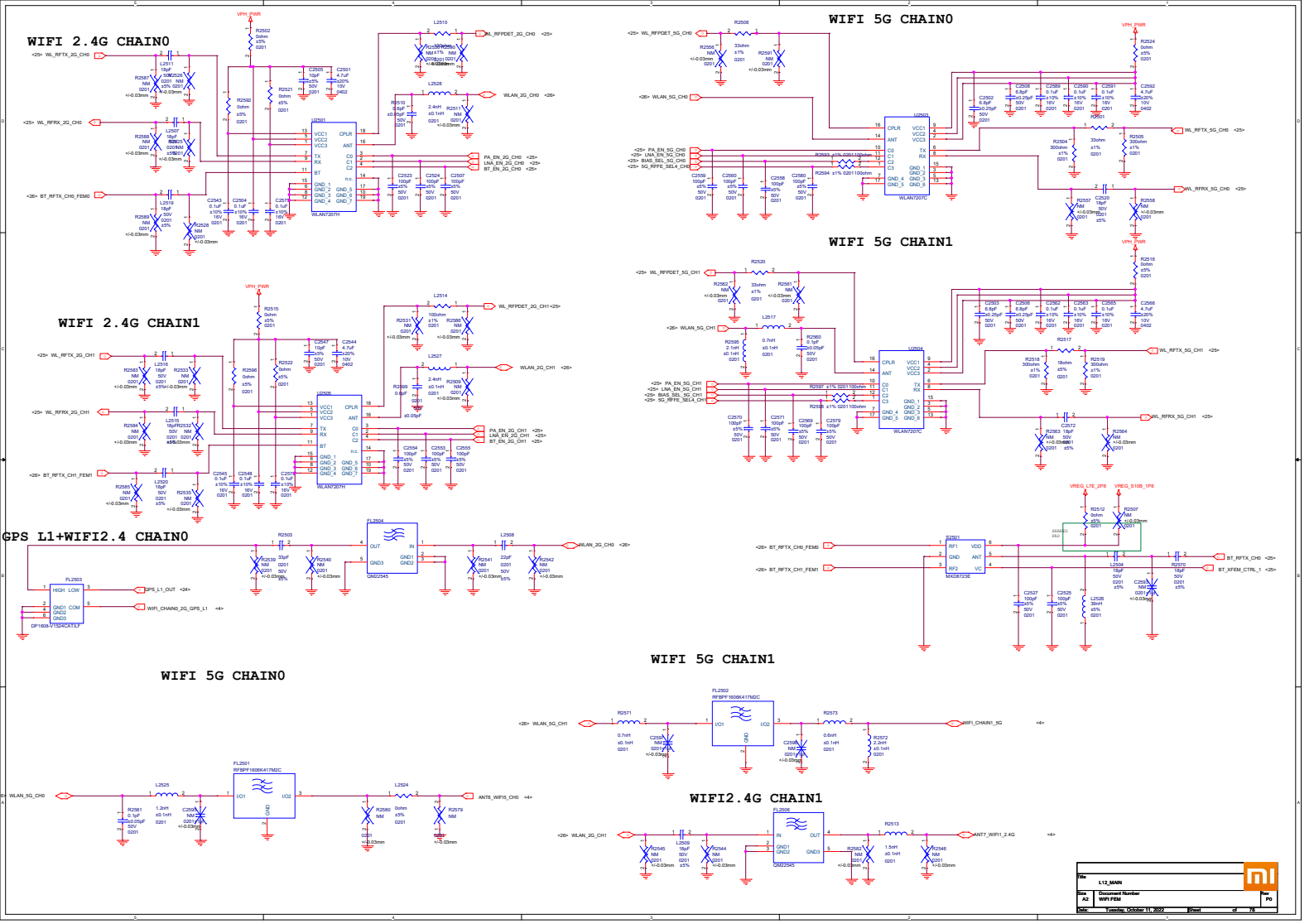
WIFI 2.4G CHAIN0
WIFI 5G CHAIN0
WIFI 2.4G CHAIN1
WIFI 5G CHAIN1
GPS L1+WIFI2.4 CHAIN0
WIFI 5G CHAIN0
WIFI 5G CHAIN1
WIFI2.4G CHAIN1
U2501
WLAN7207H
U2503
WLAN7207C
U2504
WLAN7207C
U2505
WLAN7207H
S2501
MX08723E
FL2503
DP1808-V1S24CA1EJF
FL2504
QM22545
FL2501
RFBPF1608K417M2C
FL2502
RFBPF1608K417M2C
FL2506
QM22545
VPH_PWR
VREG_LTE_2P8
VREG_S10B_1P8
WL_RFFDET_2G_CH0
WLAN_2G_CH0
PA_EN_2G_CH0
LNA_EN_2G_CH0
BIAS_SEL_2G_CH0
BT_EN_2G_CH0
WL_RFTX_2G_CH0
WL_RFRX_2G_CH0
BT_RFTX_CH0_FEM0
WL_RFFDET_2G_CH1
WLAN_2G_CH1
PA_EN_2G_CH1
LNA_EN_2G_CH1
BIAS_SEL_2G_CH1
BT_EN_2G_CH1
WL_RFTX_2G_CH1
WL_RFRX_2G_CH1
BT_RFTX_CH1_FEM1
WL_RFFDET_5G_CH0
WLAN_5G_CH0
PA_EN_5G_CH0
LNA_EN_5G_CH0
BIAS_SEL_5G_CH0
5G_RFFE_SEL4_CH0
WL_RFTX_5G_CH0
WL_RFRX_5G_CH0
WL_RFFDET_5G_CH1
WLAN_5G_CH1
PA_EN_5G_CH1
LNA_EN_5G_CH1
BIAS_SEL_5G_CH1
5G_RFFE_SEL4_CH1
WL_RFTX_5G_CH1
WL_RFRX_5G_CH1
BT_RFTX_CH0
BT_RFTX_CH1
BT_XFEM_CTRL_1
GPS_L1_OUT
WIFI_CHAIN0_2G_GPS_L1
WIFI_CHAIN1_5G
ANT6_WIFI5_CH0
ANT7_WIFI1_2.4G
Title
L12_MAIN
Size
A2
Document Number
WIFI FEM
Rev
P0
Date
Tuesday, October 11, 2022
Sheet
of
78

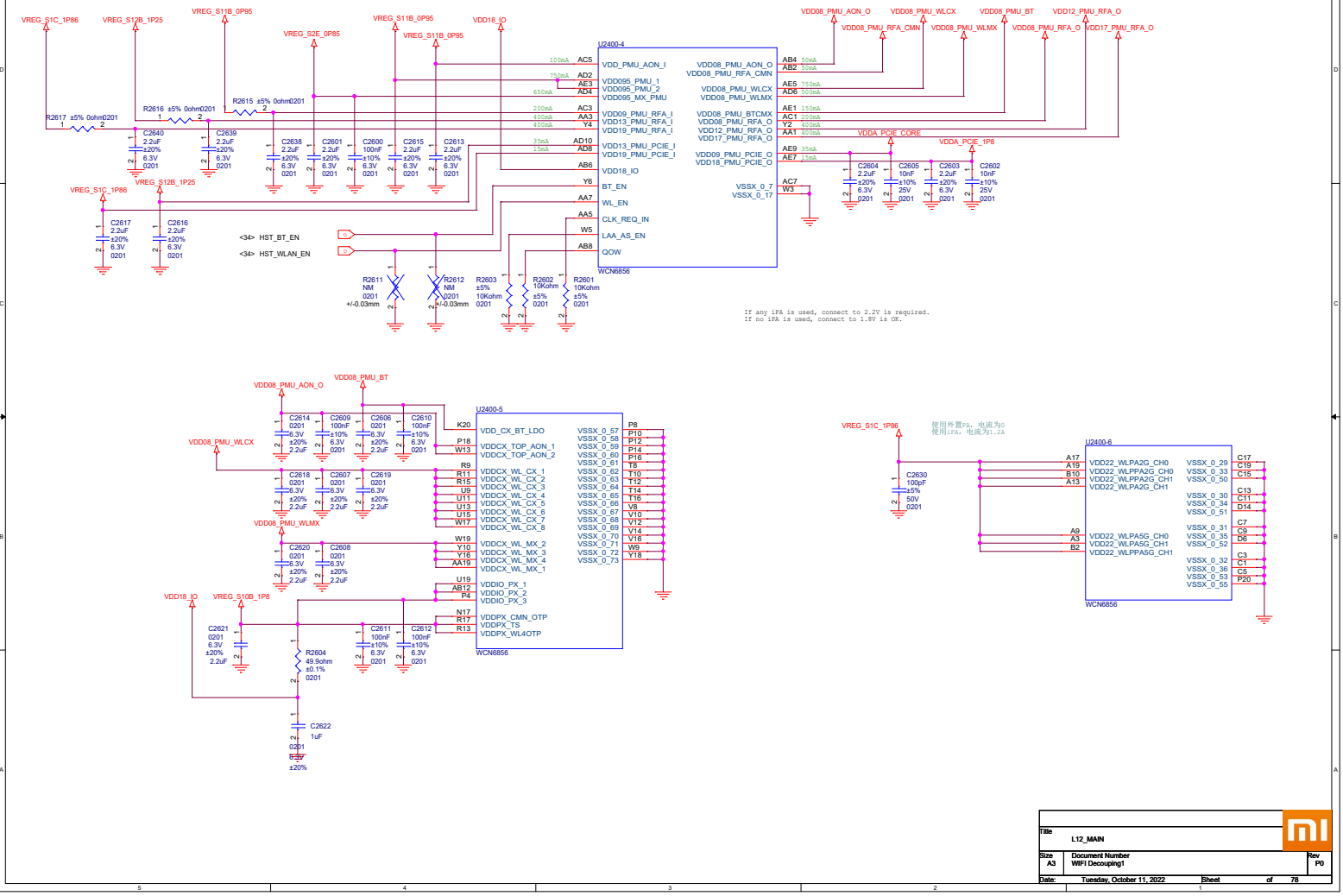

Title	L12_MAIN		
Size A3	Document Number WIFI Decouping1		Rev P0
Date: Tuesday, October 11, 2022	Sheet	of 78	

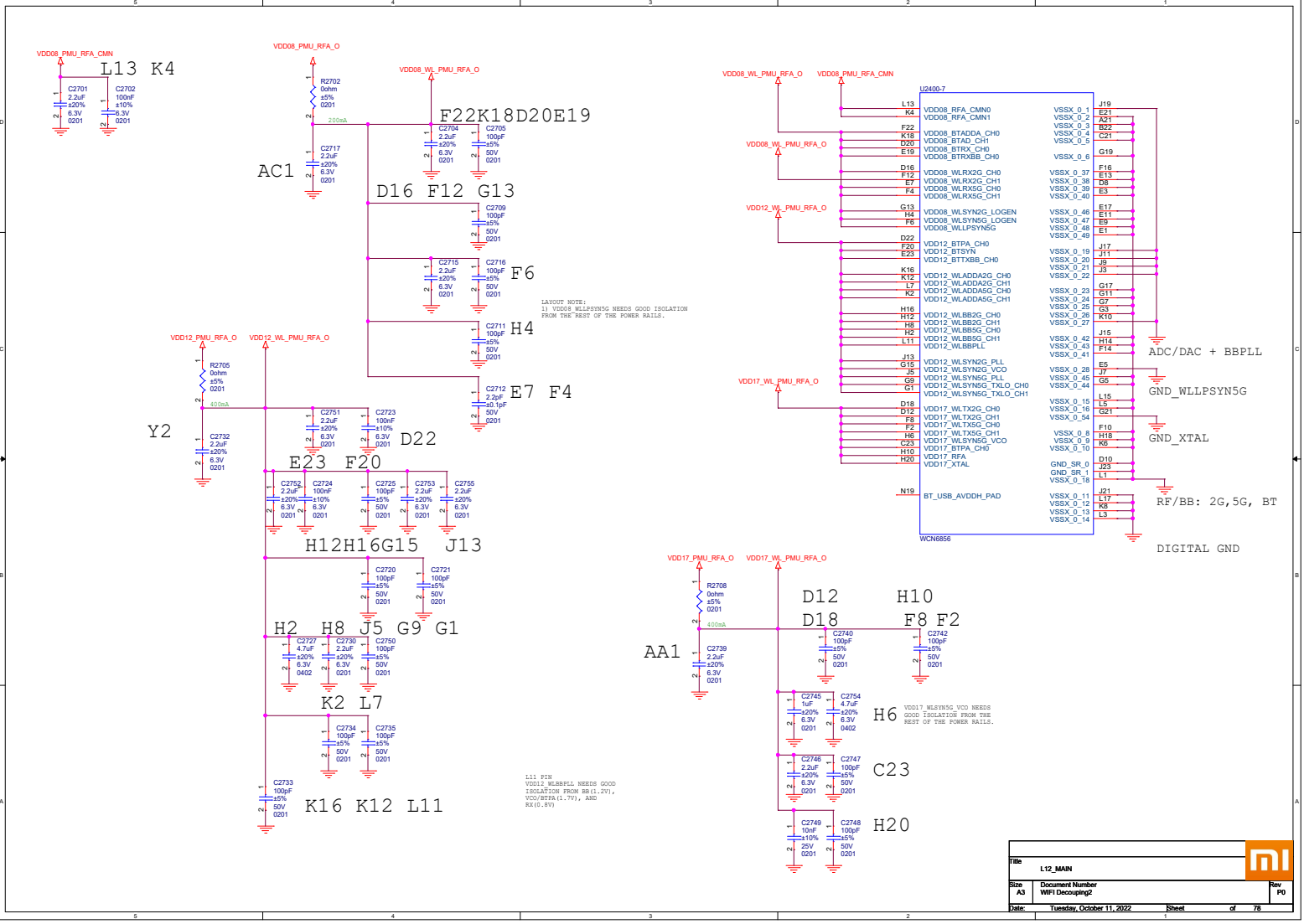
VDD08_PMU_RFA_CMN
L13 K4
C2701 2.2uF ±20% 6.3V 0201
C2702 100nF ±10% 6.3V 0201
VDD08_PMU_RFA_O
R2702 0ohm ±5% 0201
200mA
C2717 2.2uF ±20% 6.3V 0201
AC1
VDD08_WL_PMU_RFA_O
F22K18D20E19
C2704 2.2uF ±20% 6.3V 0201
C2705 100pF ±5% 50V 0201
D16 F12 G13
C2709 100pF ±5% 50V 0201
C2715 2.2uF ±20% 6.3V 0201
C2716 100pF ±5% 50V 0201
F6
C2711 100pF ±5% 50V 0201
H4
C2712 2.2pF ±0.1pF 50V 0201
E7 F4
LAYOUT NOTE:
1) VDD08_WLLPSYN5G NEEDS GOOD ISOLATION FROM THE REST OF THE POWER RAILS.
VDD12_PMU_RFA_O
VDD12_WL_PMU_RFA_O
R2705 0ohm ±5% 0201
400mA
Y2
C2732 2.2uF ±20% 6.3V 0201
C2751 2.2uF ±20% 6.3V 0201
C2723 100nF ±10% 6.3V 0201
D22
E23 F20
C2752 2.2uF ±20% 6.3V 0201
C2724 100nF ±10% 6.3V 0201
C2725 100pF ±5% 50V 0201
C2753 2.2uF ±20% 6.3V 0201
C2755 2.2uF ±20% 6.3V 0201
H12H16G15 J13
C2720 100pF ±5% 50V 0201
C2721 100pF ±5% 50V 0201
H2 H8 J5 G9 G1
C2727 4.7uF ±20% 6.3V 0402
C2730 2.2uF ±20% 6.3V 0201
C2750 100pF ±5% 50V 0201
K2 L7
C2734 100pF ±5% 50V 0201
C2735 100pF ±5% 50V 0201
C2733 100pF ±5% 50V 0201
K16 K12 L11
L11 PIN
VDD12 WLBBPLL NEEDS GOOD ISOLATION FROM BB(1.2V), VCO/BTPA(1.7V), AND RX(0.8V)
VDD08_WL_PMU_RFA_O
VDD08_PMU_RFA_CMN
U2400-7
L13 K4 VDD08_RFA_CMN0
VDD08_RFA_CMN1
F22 K18 D20 E19 VDD08_BTADDA_CH0
VDD08_BTAD_CH1
VDD08_BTRX_CH0
VDD08_BTRXBB_CH0
D16 F12 E7 F4 VDD08_WLRX2G_CH0
VDD08_WLRX2G_CH1
VDD08_WLRX5G_CH0
VDD08_WLRX5G_CH1
G13 H4 F6 VDD08_WLSYN2G_LOGEN
VDD08_WLSYN5G_LOGEN
VDD08_WLLPSYN5G
D22 F20 E23 VDD12_BTPA_CH0
VDD12_BTSYN
VDD12_BTTXBB_CH0
K16 K12 L7 K2 VDD12_WLADDA2G_CH0
VDD12_WLADDA2G_CH1
VDD12_WLADDA5G_CH0
VDD12_WLADDA5G_CH1
H16 H12 H8 H2 L11 VDD12_WLBB2G_CH0
VDD12_WLBB2G_CH1
VDD12_WLBB5G_CH0
VDD12_WLBB5G_CH1
VDD12_WLBBPLL
J13 G15 J5 G9 G1 VDD12_WLSYN2G_PLL
VDD12_WLSYN2G_VCO
VDD12_WLSYN5G_PLL
VDD12_WLSYN5G_TXLO_CH0
VDD12_WLSYN5G_TXLO_CH1
D18 D12 F8 F2 H6 C23 H10 H20 VDD17_WLTX2G_CH0
VDD17_WLTX2G_CH1
VDD17_WLTX5G_CH0
VDD17_WLTX5G_CH1
VDD17_WLSYN5G_VCO
VDD17_BTPA_CH0
VDD17_RFA
VDD17_XTAL
N19 BT_USB_AVDDH_PAD
VSSX_0_1 E21
VSSX_0_2 A21
VSSX_0_3 B22
VSSX_0_4 C21
VSSX_0_5
VSSX_0_6 G19
VSSX_0_37 F16
VSSX_0_38 E13
VSSX_0_39 D8
VSSX_0_40 E3
VSSX_0_46 E17
VSSX_0_47 E11
VSSX_0_48 E9
VSSX_0_49 E1
VSSX_0_19 J17
VSSX_0_20 J11
VSSX_0_21 J9
VSSX_0_22 J3
VSSX_0_23 G17
VSSX_0_24 G11
VSSX_0_25 G7
VSSX_0_26 G3
VSSX_0_27 K10
VSSX_0_42 J15
VSSX_0_43 H14
VSSX_0_41 F14
ADC/DAC + BBPLL
VSSX_0_28 E5
VSSX_0_45 J7
VSSX_0_44 G5
GND_WLLPSYN5G
VSSX_0_15 L15
VSSX_0_16 L5
VSSX_0_54 G21
GND_XTAL
VSSX_0_8 F10
VSSX_0_9 H18
VSSX_0_10 K6
GND_SR_0 D10
GND_SR_1 J23
VSSX_0_18 L1
VSSX_0_11 J21
VSSX_0_12 L17
VSSX_0_13 K8
VSSX_0_14 L3
RF/BB: 2G,5G, BT
DIGITAL GND
WCN6856
VDD17_PMU_RFA_O
VDD17_WL_PMU_RFA_O
R2708 0ohm ±5% 0201
400mA
AA1
C2739 2.2uF ±20% 6.3V 0201
C2740 100pF ±5% 50V 0201
C2742 100pF ±5% 50V 0201
C2745 1uF ±20% 6.3V 0201
C2754 4.7uF ±20% 6.3V 0402
H6
VDD17_WLSYN5G_VCO NEEDS GOOD ISOLATION FROM THE REST OF THE POWER RAILS.
C2746 2.2uF ±20% 6.3V 0201
C2747 100pF ±5% 50V 0201
C23
C2749 10nF ±10% 25V 0201
C2748 100pF ±5% 50V 0201
H20
Title
L12_MAIN
Size A3
Document Number
WIFI Decouping2
Rev P0
Date: Tuesday, October 11, 2022
Sheet of 78

Title	L12_MAIN
Size A3	Document Number Reserved(for 11ad/11ax)
Rev	P0
Date:	Tuesday, October 11, 2022
Sheet	of 78

Title	L12_MAIN
Size A3	Document Number UWB-1
Rev	P0
Date:	Tuesday, October 11, 2022
Sheet	of 78

Title	L12_MAIN
Size A3	Document Number UWB-2
Rev	P0
Date: Tuesday, October 11, 2022	Sheet of 78

Place all ZQ resistors close to SM8475

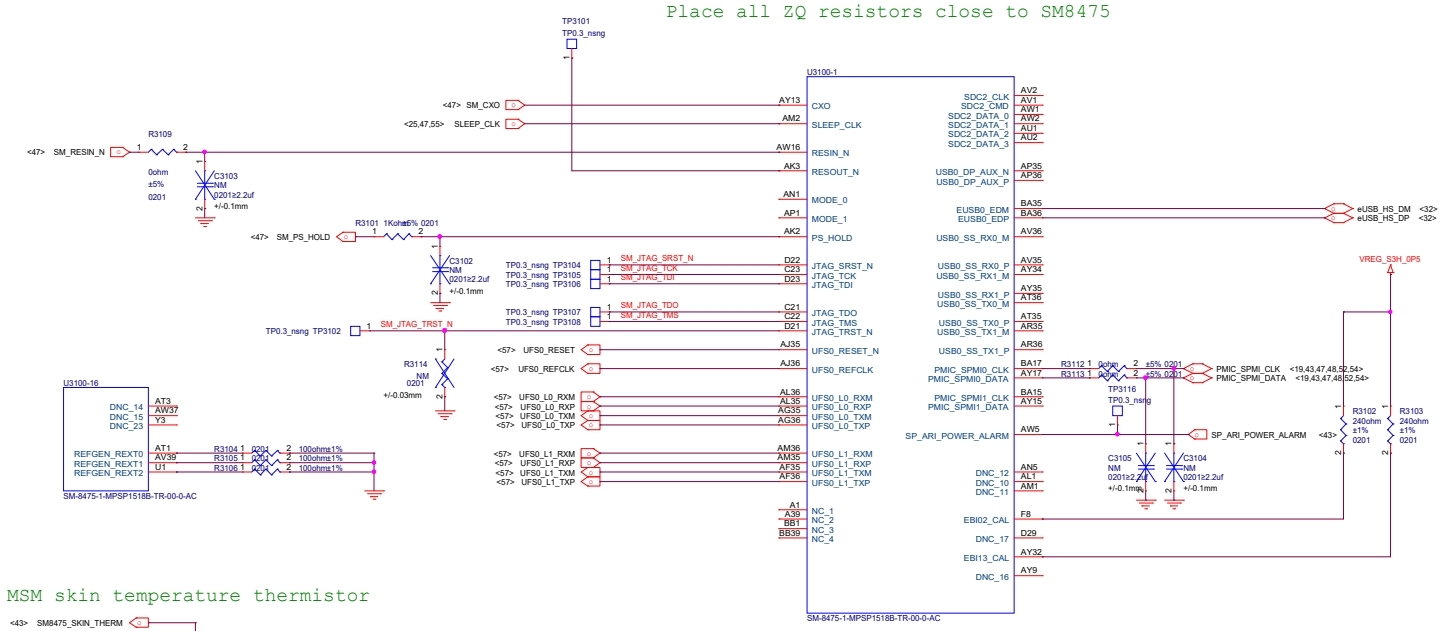

MSM skin temperature thermistor

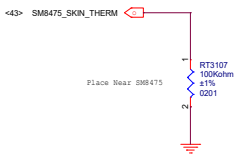

Quiet thermistor Place on a cool place

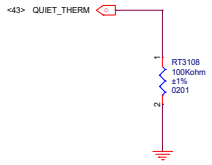

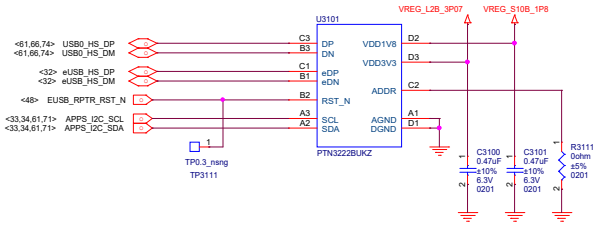

I2C ADDRESS:0X4F

Title	L12_MAIN		
Size A3	Document Number SM8475 Control		Rev P0
Date: Tuesday, October 11, 2022	Sheet	of 78	

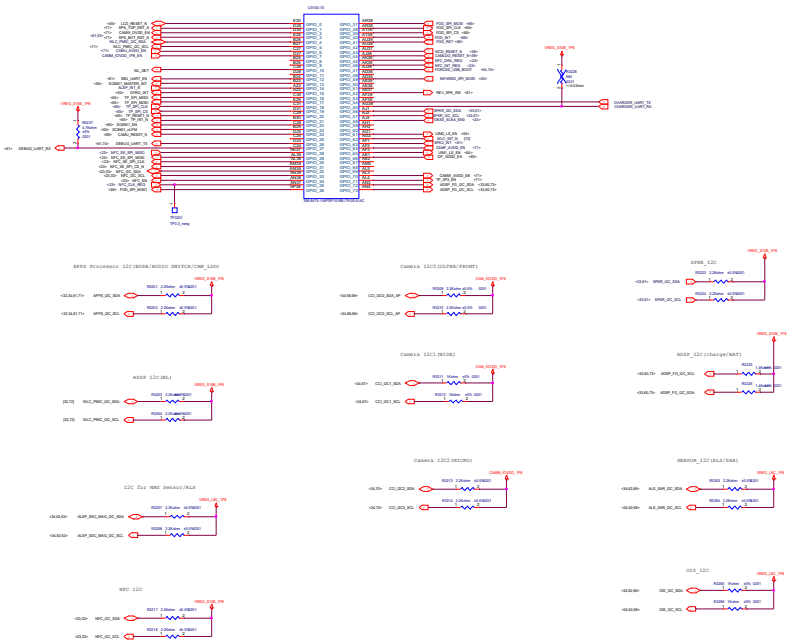

	LCD_MAIN		
A3	Document Number MIMAIN_EVT0.1		Rev
Date: Tuesday, October 13, 2020		Sheet 2 of 9	

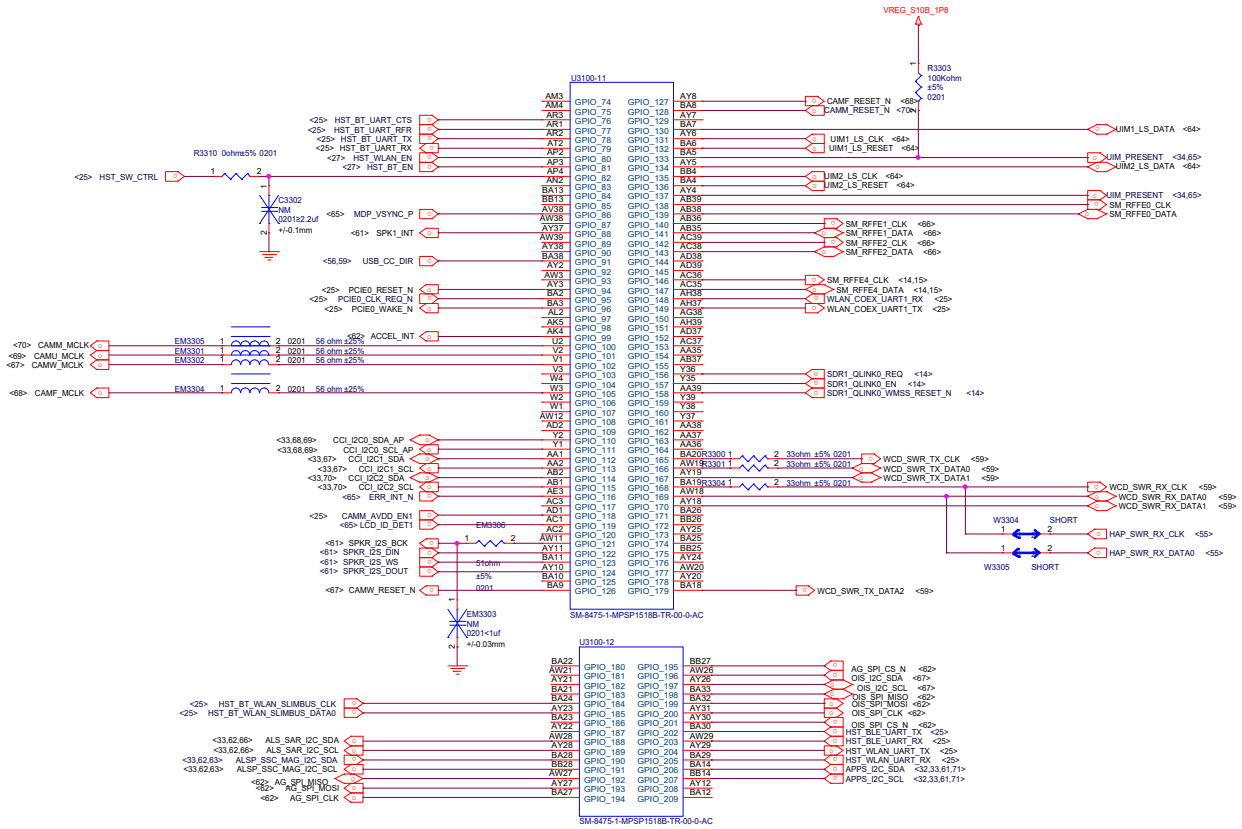

Title	L12_MAIN		
Size A3	Document Number SM8475 GPIO-2		Rev P0
Date: Tuesday, October 11, 2022	Sheet	of 78	

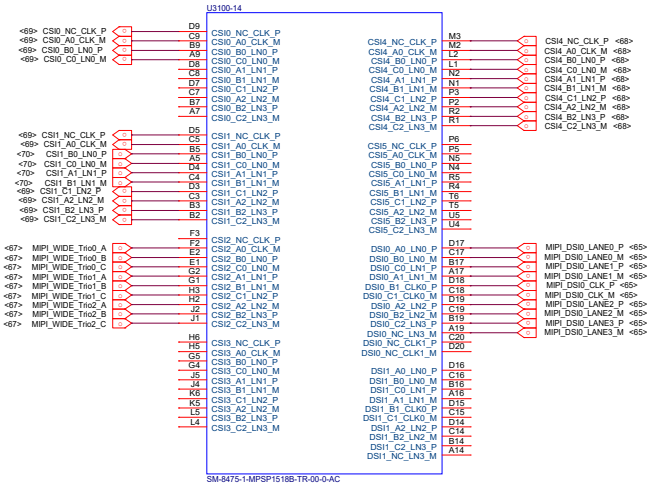

Title	L12_MAIN		
Size A3	Document Number SM8475 MIPI		Rev P0
Date: Tuesday, October 11, 2022	Sheet	of 78	

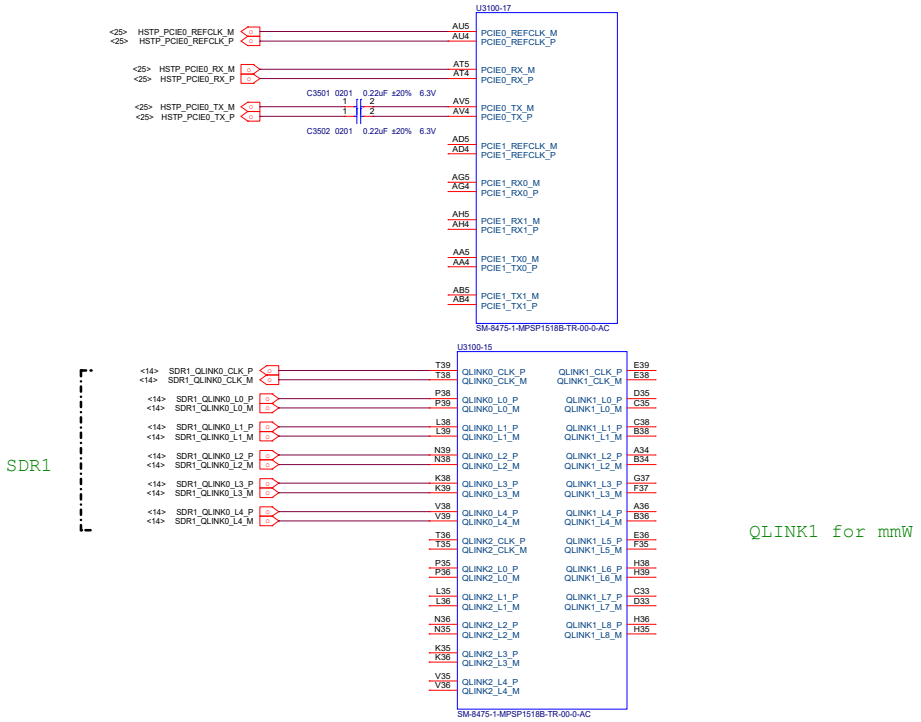

QLINK1 for mmW

Title	L12_MAIN		
Size A3	Document Number SM8475 MIPI RF		Rev P0
Date: Tuesday, October 11, 2022	Sheet	of 78	

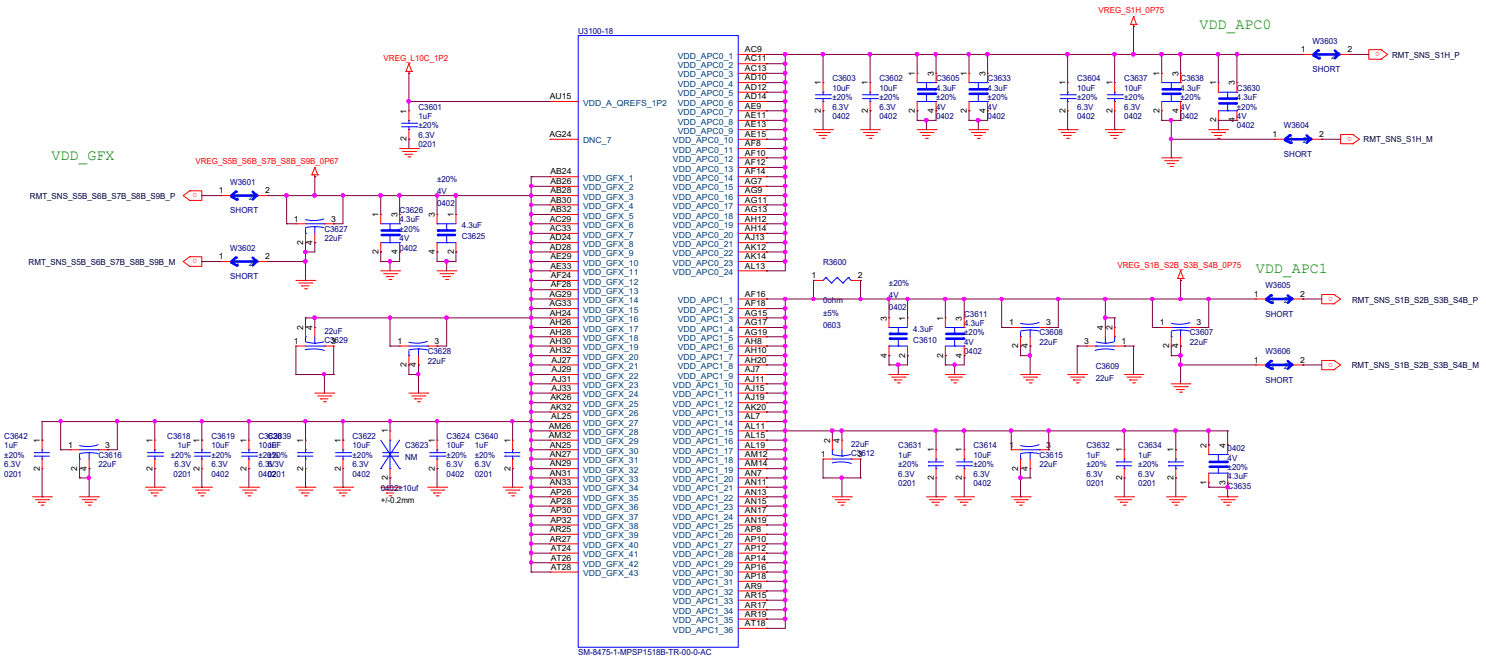

Title	L2_MAIN		
Size A3	Document Number SM8450 EVB		Rev P0
Date: Tuesday, October 11, 2022	Sheet 37 of 78		

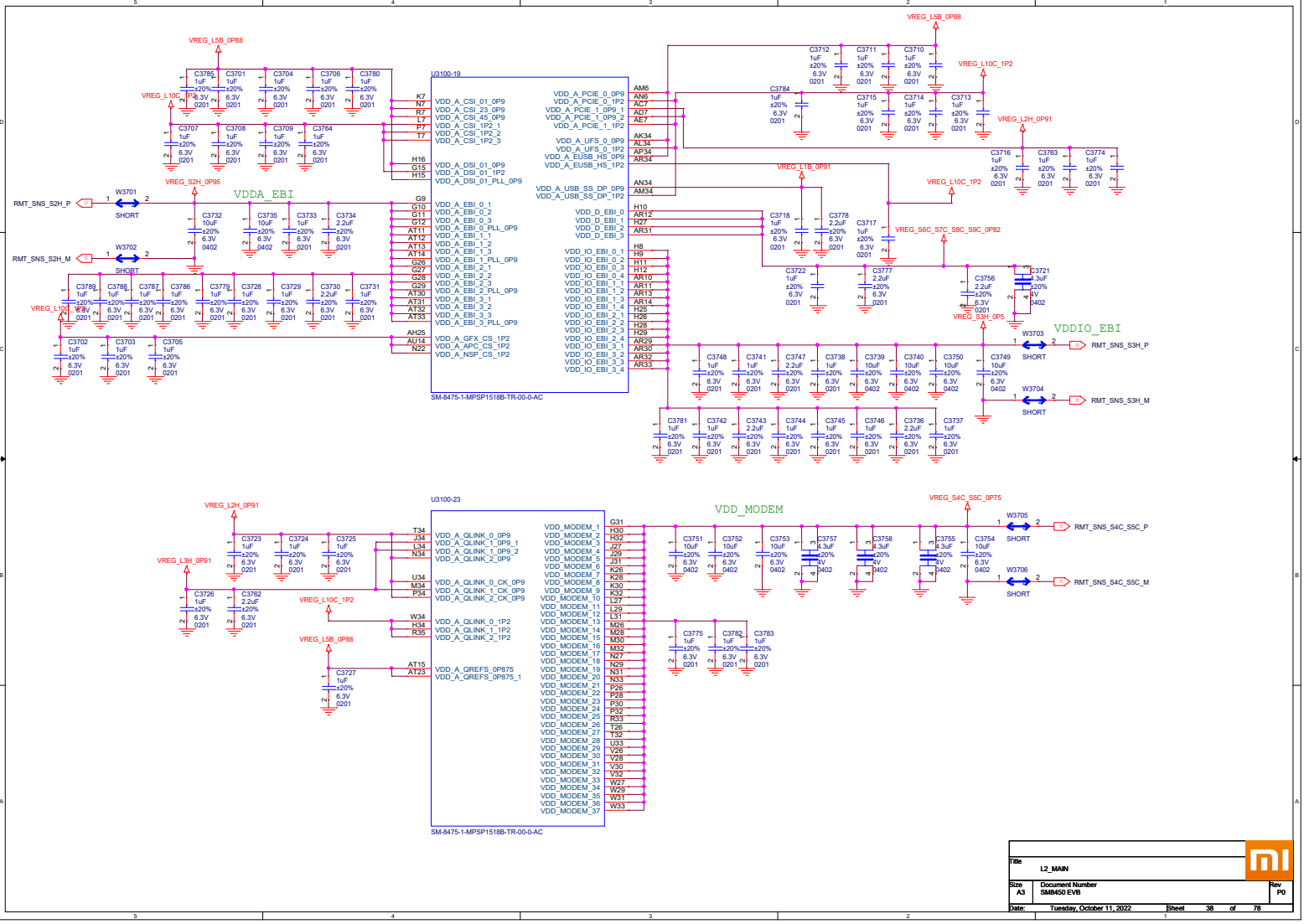

Title	L2_MAIN		
Size A3	Document Number SM8450 EVB		Rev P0
Date: Tuesday, October 11, 2022	Sheet 38 of 78		

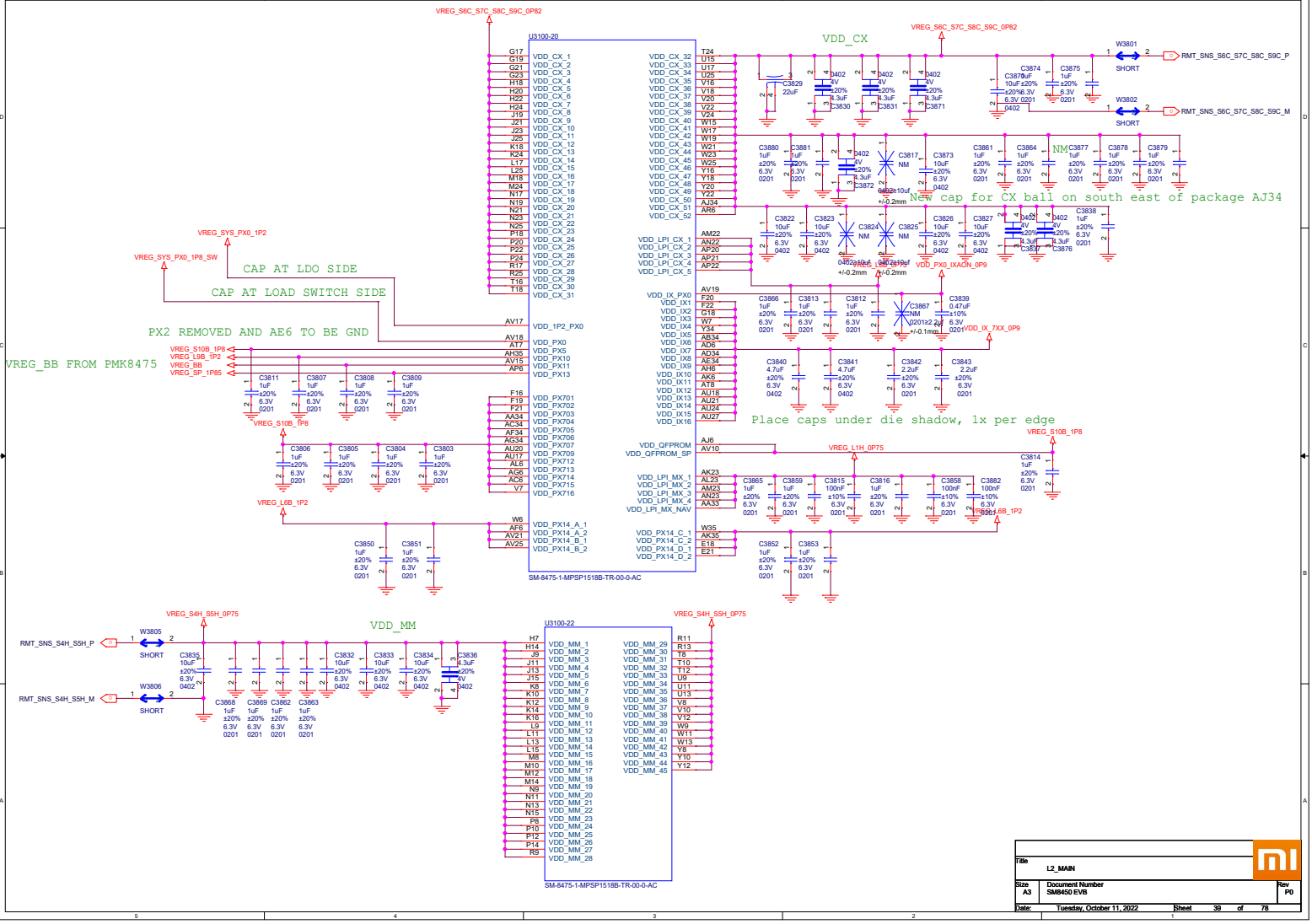

Title	L2_MAIN		
Size A3	Document Number SM8450 EVB		Rev P0
Date: Tuesday, October 11, 2022	Sheet 39 of 78		

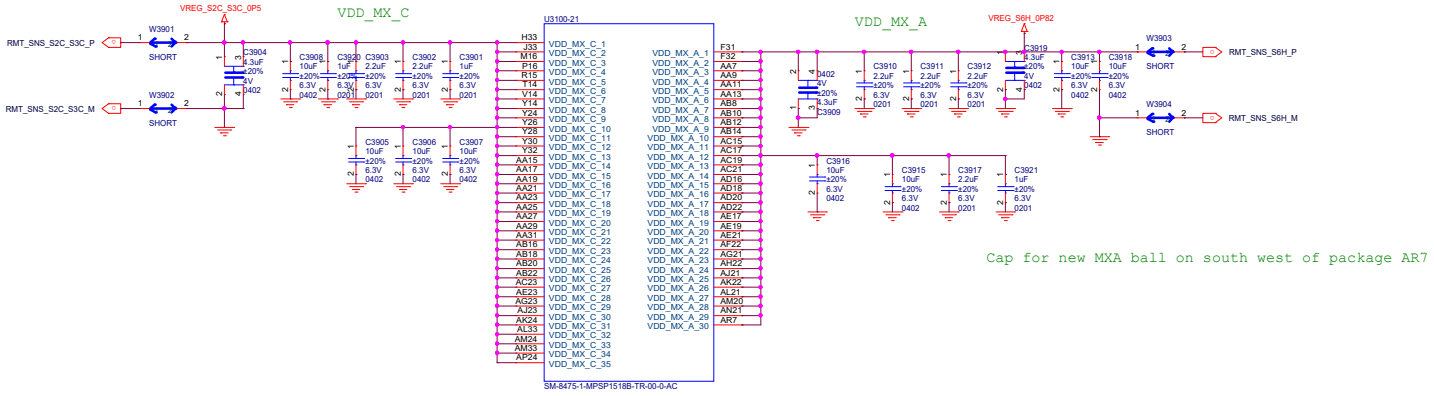

Title	L2_MAIN	
Size A3	Document Number SM8450 EVB	Rev P0
Date: Tuesday, October 11, 2022	Sheet 40 of 78	

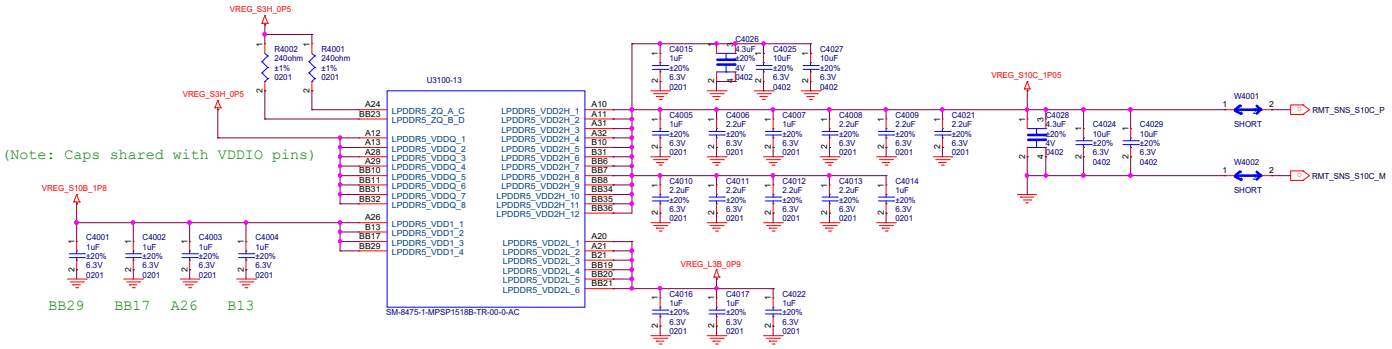

Title	L2_MAIN	
Size A3	Document Number SM8450 EVB	Rev P0
Date: Tuesday, October 11, 2022	Sheet 41 of 78	

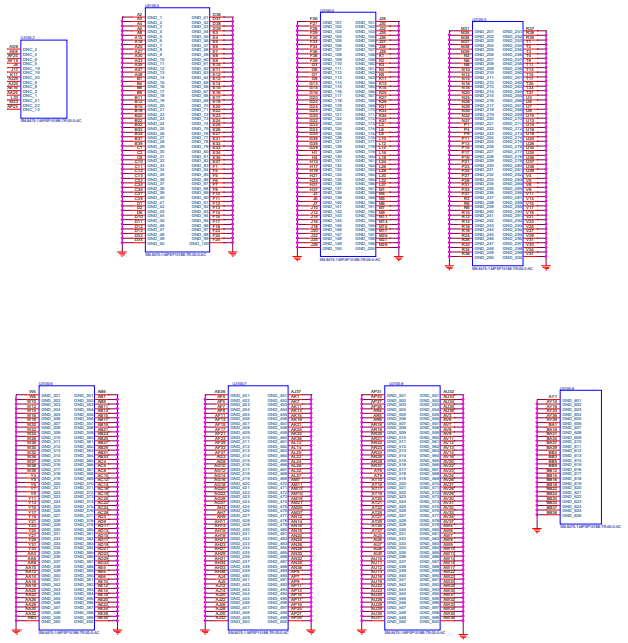

Title	L12_GND	
Size	Document Number	Rev
A3	0GMA16-2300	1A
Date:	Tuesday, October 14, 2008	Sheet 27 of 30

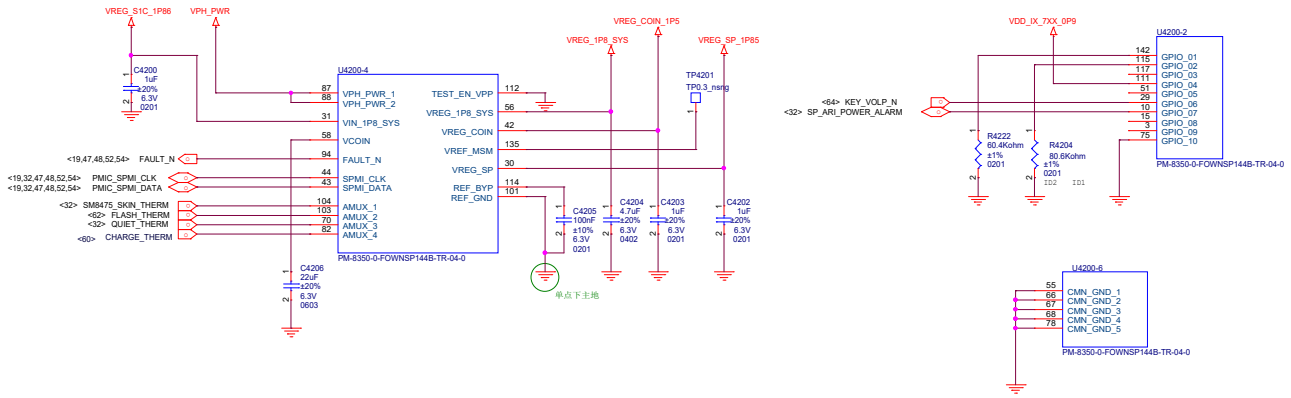

Title	L12_MAIN	
Size A3	Document Number PM8350 XO&CTRL	Rev P0
Date: Tuesday, October 11, 2022	Sheet of 78	

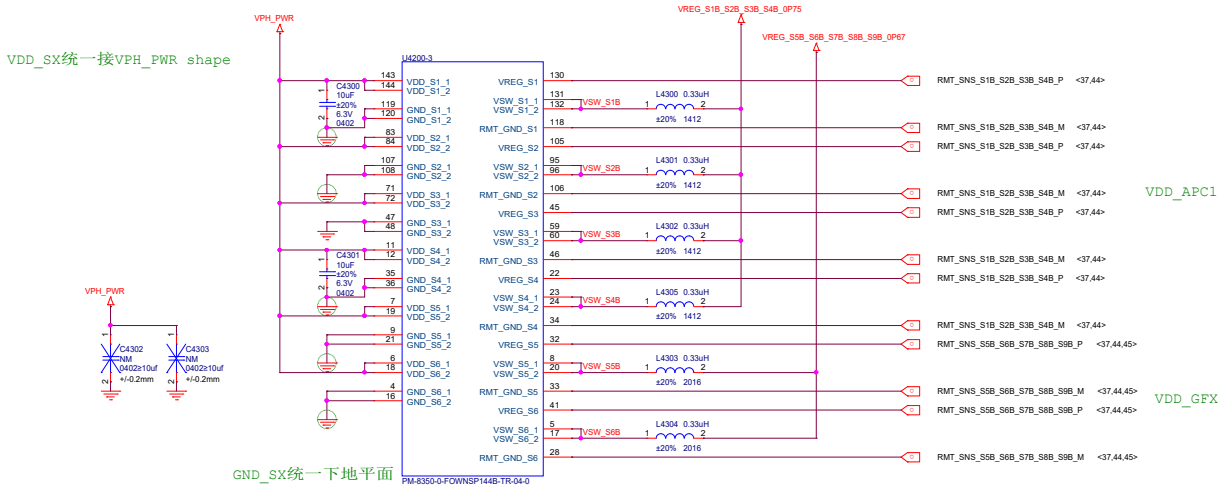

Title	L12_MAIN		
Size A3	Document Number PM8350 BUCK CONVERTER1		Rev P0
Date: Tuesday, October 11, 2022	Sheet	of 78	

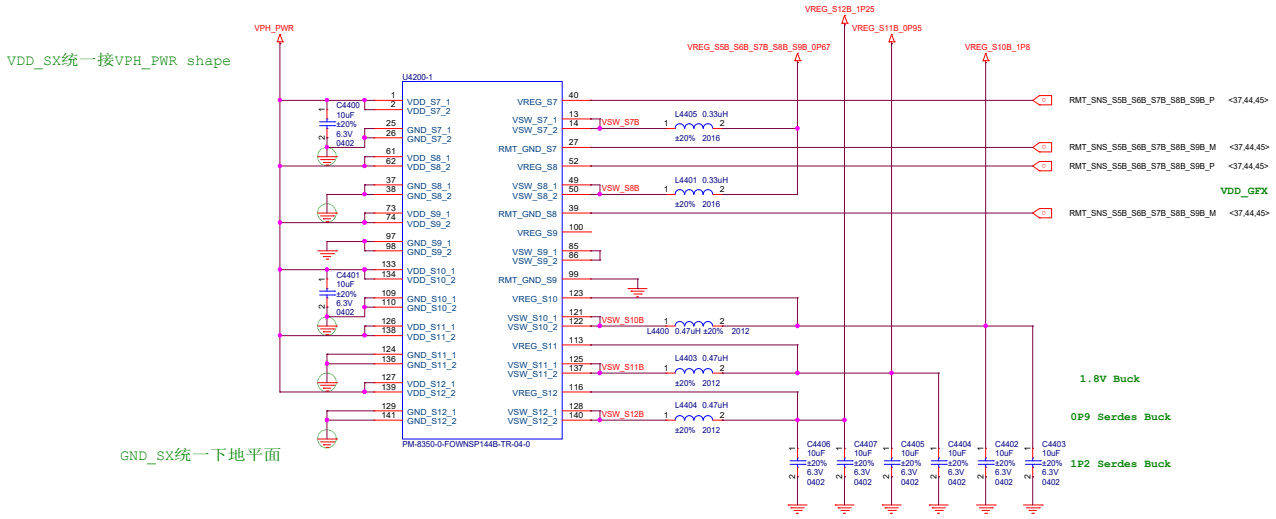

Title	L12_MAIN	
Size A3	Document Number PM8350 BUCK CONVERTER2	Rev P0
Date: Tuesday, October 11, 2022	Sheet of 78	

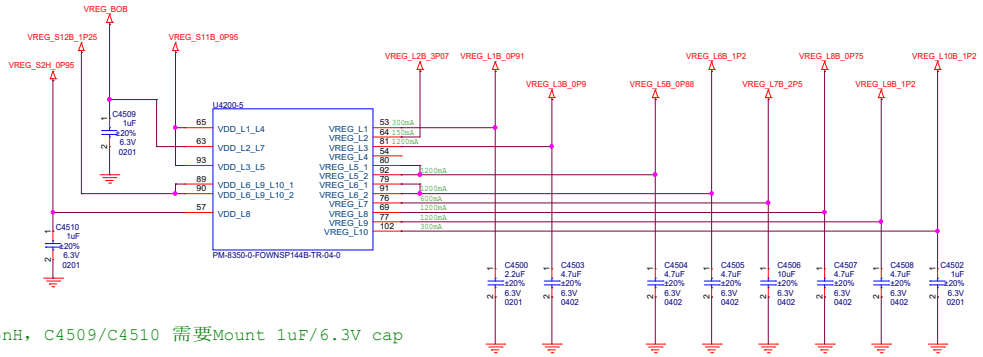

输入ESL大于15nH，C4509/C4510 需要Mount 1uF/6.3V cap

Title	L12_MAIN	
Size A3	Document Number PM8350 LDOs	Rev P0
Date: Tuesday, October 11, 2022	Sheet 46 of 78	

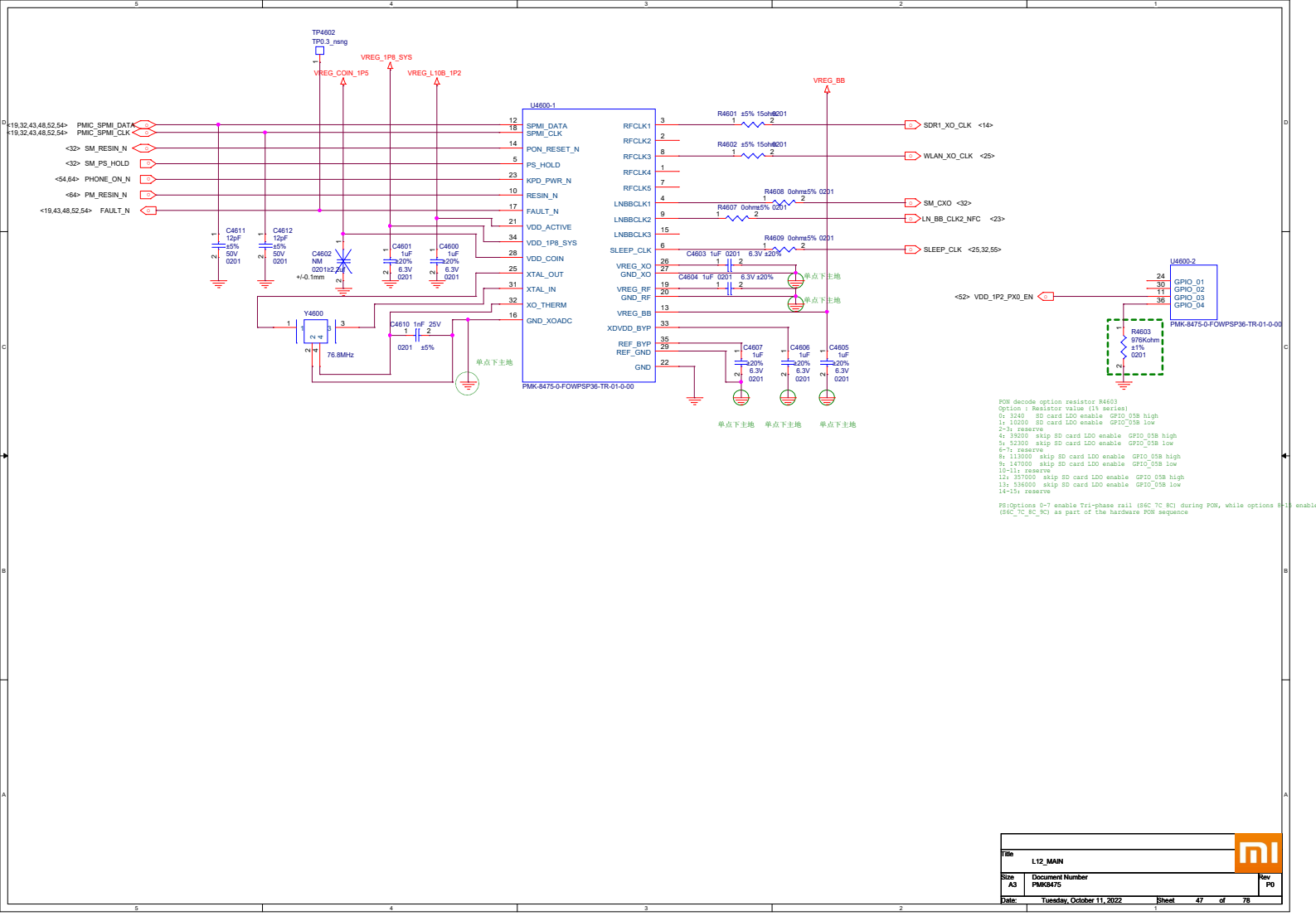


```
PON decode option resistor R4603
Option : Resistor value (1% series)
0: 3240   SD card LDO enable  GPIO_05B high
1: 10200  SD card LDO enable  GPIO_05B low
2-3: reserve
4: 39200  skip SD card LDO enable  GPIO_05B high
5: 52300  skip SD card LDO enable  GPIO_05B low
6-7: reserve
8: 113000  skip SD card LDO enable  GPIO_05B high
9: 147000  skip SD card LDO enable  GPIO_05B low
10-11: reserve
12: 357000  skip SD card LDO enable  GPIO_05B high
13: 536000  skip SD card LDO enable  GPIO_05B low
14-15: reserve

PS:Options 0-7 enable Tri-phase rail (S6C_7C_8C) during PON, while options 8-15 enable
(S6C_7C_8C_9C) as part of the hardware PON sequence
```

Title	L12_MAIN		
Size A3	Document Number PMK8475		Rev P0
Date: Tuesday, October 11, 2022	Sheet 47 of 78		

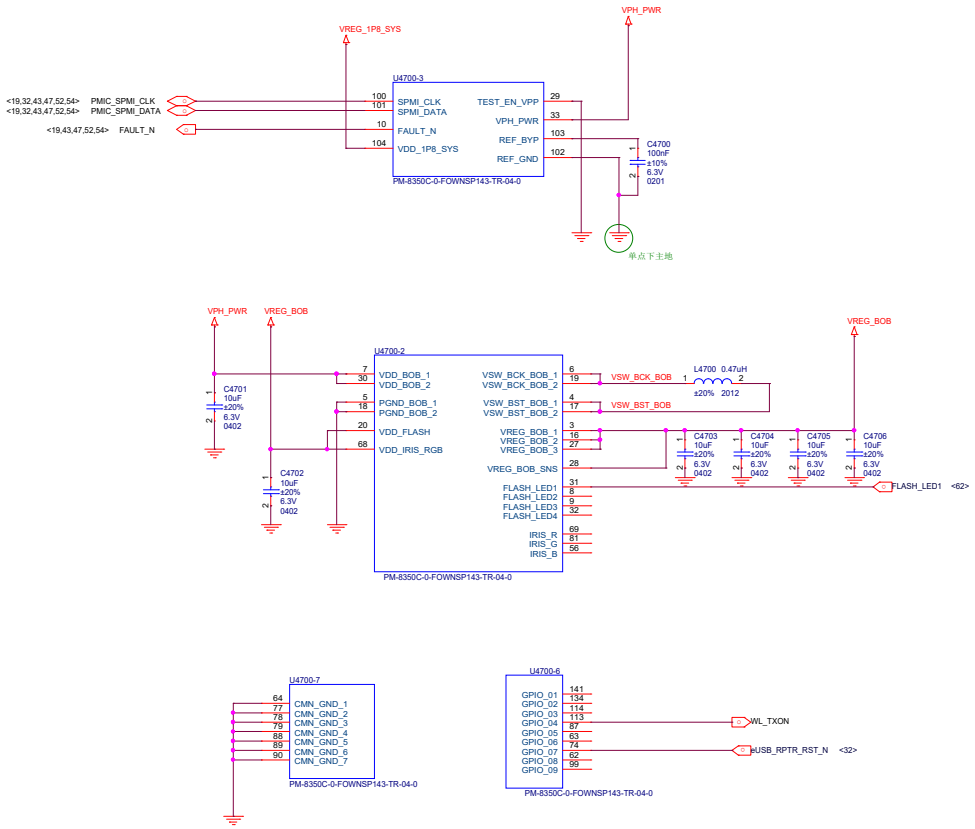

Title	L12_MAIN		
Size A3	Document Number PM8350C CTRL&GND		Rev P0
Date: Tuesday, October 11, 2022	Sheet 48 of 78		

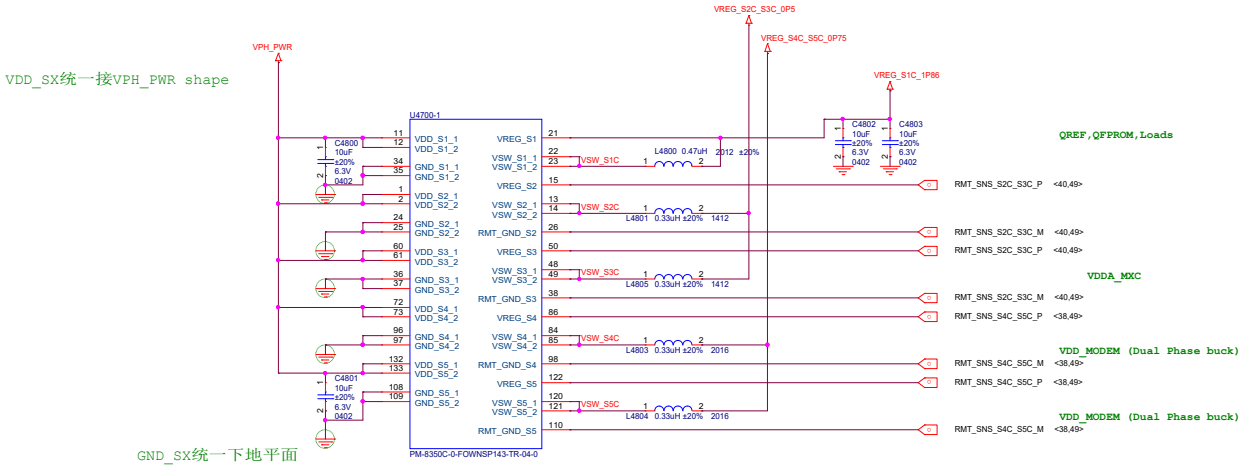

Title	L12_MAIN	
Size A3	Document Number PM8350C BUCK CONVERTER1	Rev P0
Date: Tuesday, October 11, 2022	Sheet 49 of 78	

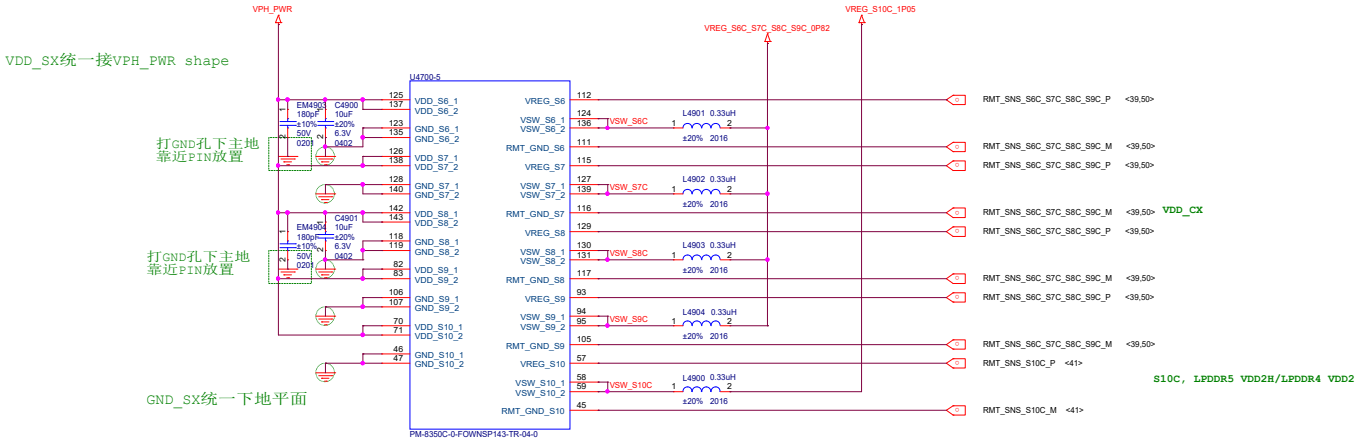

Title	L12_MAIN	
Size A3	Document Number PM8350C BUCK CONVERTER2	Rev P0
Date: Tuesday, October 11, 2022	Sheet 50 of 78	

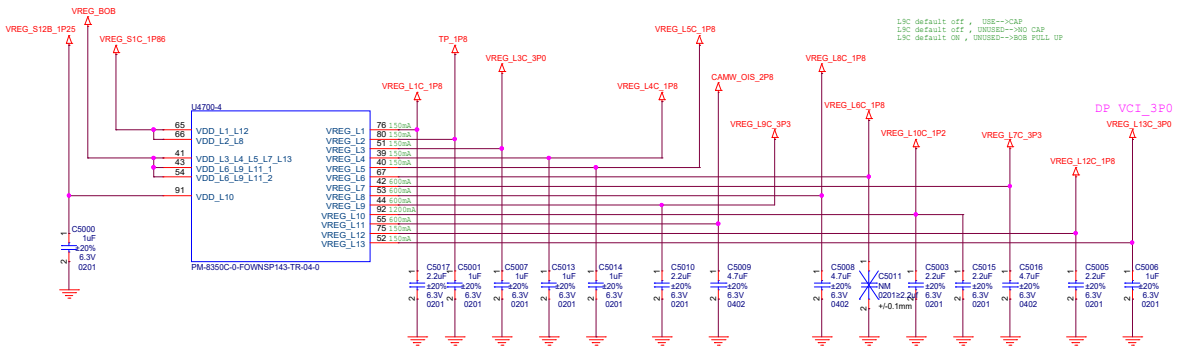

Title	L12_MAIN	
Size A3	Document Number PM8350C LDOs	Rev P0
Date: Tuesday, October 11, 2022	Sheet 51 of 78	

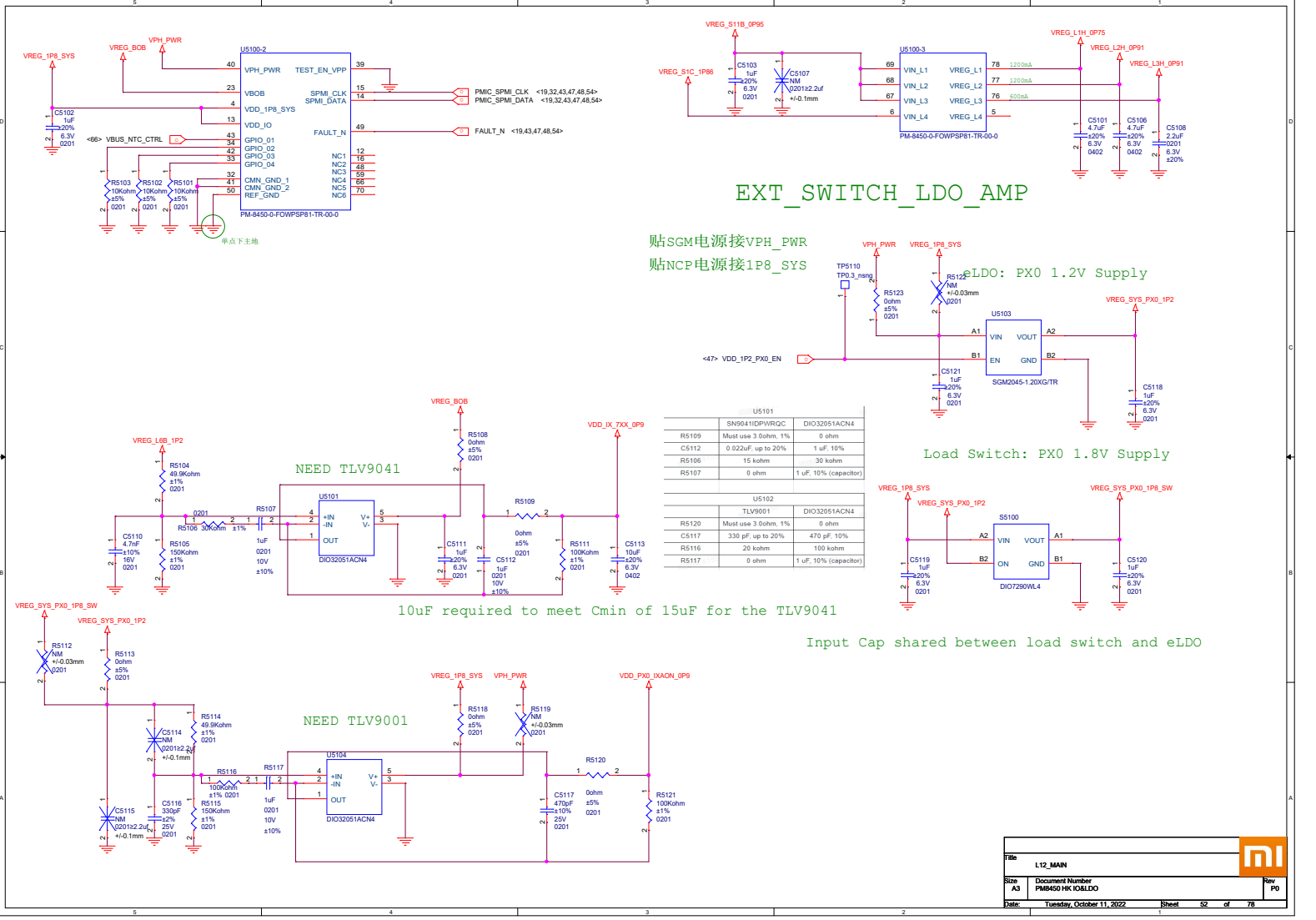

U5101		
	SN9041IDPWRQC	DIO32051ACN4
R5109	Must use 3.0ohm, 1%	0 ohm
C5112	0.022uF, up to 20%	1 uF, 10%
R5106	15 kohm	30 kohm
R5107	0 ohm	1 uF, 10% (capacitor)

U5102		
	TLV9001	DIO32051ACN4
R5120	Must use 3.0ohm, 1%	0 ohm
C5117	330 pF, up to 20%	470 pF, 10%
R5116	20 kohm	100 kohm
R5117	0 ohm	1 uF, 10% (capacitor)

Title	L12_MAIN	
Size A3	Document Number PM8450 HK IO&LDO	Rev P0
Date: Tuesday, October 11, 2022	Sheet 52 of 78	

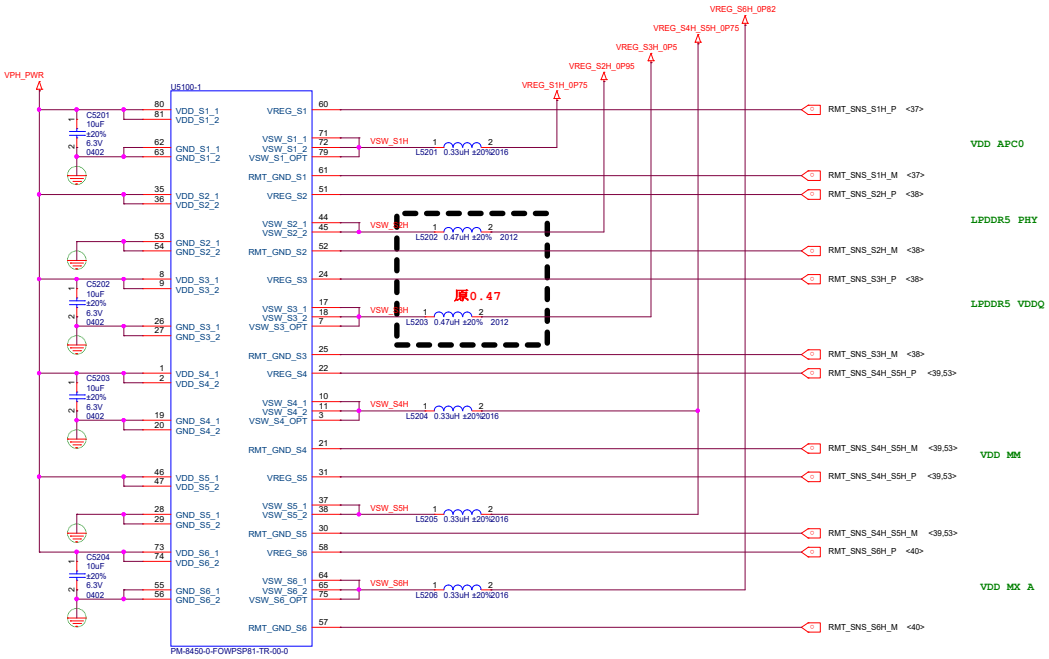

Title	L12_MAIN		
Size A3	Document Number PM8450 BUCK		Rev P0
Date: Tuesday, October 11, 2022	Sheet 53 of 78		

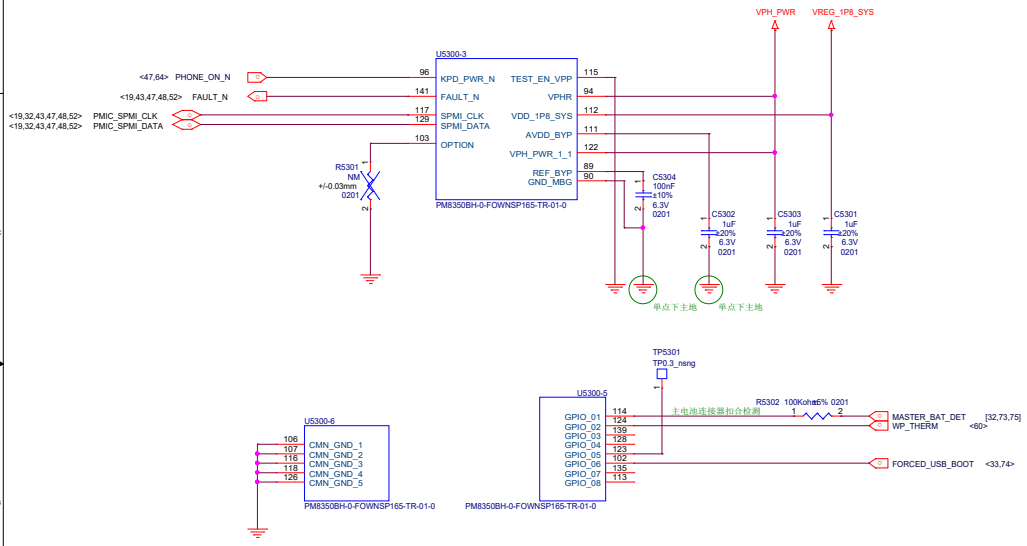

Title	L12_MAIN	
Size A3	Document Number PM8350B CTRL&GND	Rev P0
Date: Tuesday, October 11, 2022	Sheet 54 of 78	

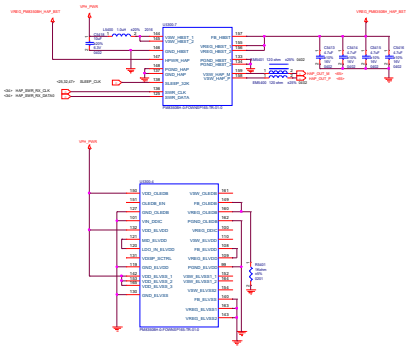

Title	L10_SMB	
Size	Document Number PMD9335-HAPTICS-SLAVE	Rev
Date	Tuesday, October 14, 2014	Sheet 38 of 70

PM8350B---1S BATTERY ,low voltage VIBRATOR DRIVER
PM8350BH---1S BATTERY ,high voltage VIBRATOR DRIVER
PM8350BHS---2S BATTERY ,high voltage VIBRATOR DRIVER

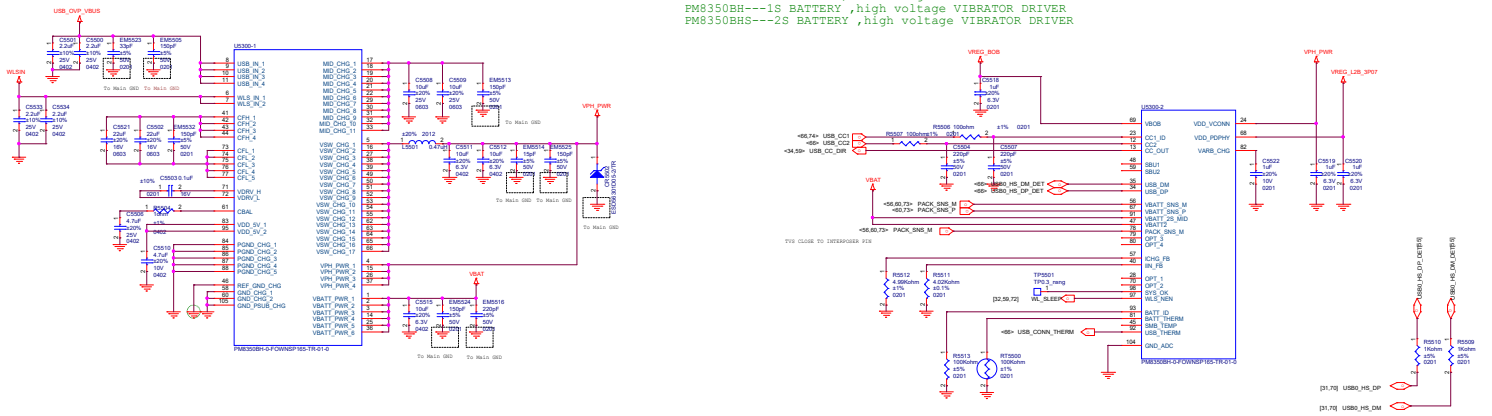

Title: L12_MAIN			
Size: A2	Document Number: PM8350B Charger		Rev: P0
Date: Tuesday, October 11, 2022	Sheet 56 of 78		

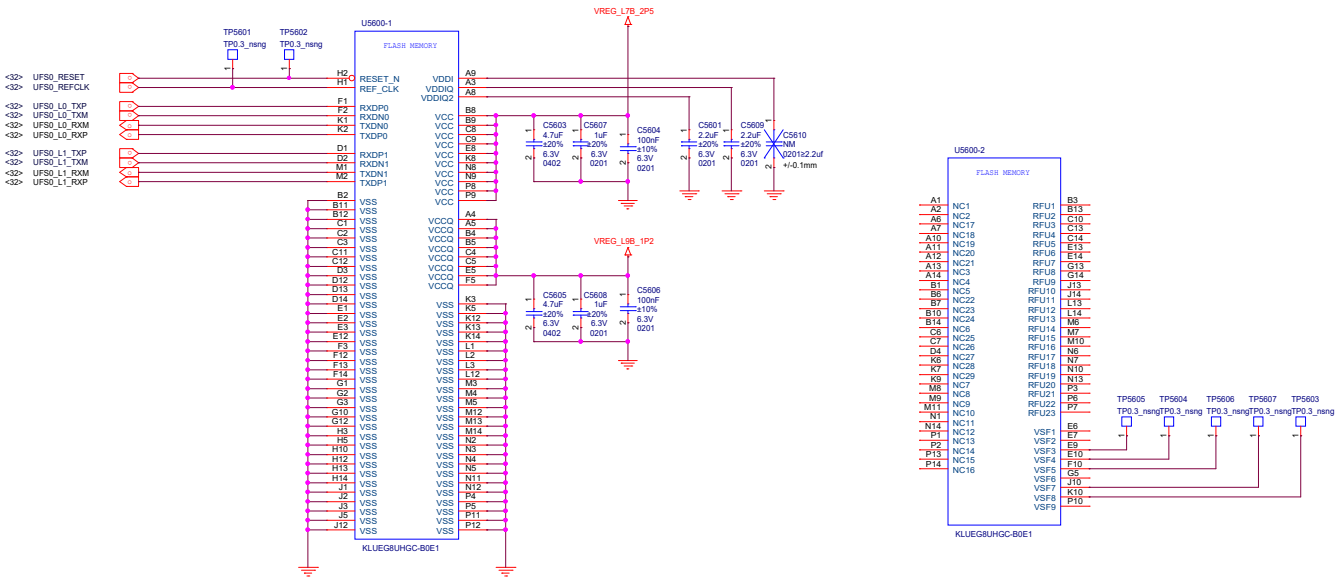

Title	L12_MAIN		
Size A3	Document Number MEMORY-1		Rev P0
Date: Tuesday, October 11, 2022	Sheet 57 of 78		

Title	L12_MAIN
Size A3	Document Number MEMORY-2
Rev	P0
Date:	Tuesday, October 11, 2022
Sheet	58 of 78

放在中间路径gnd环境好的位置

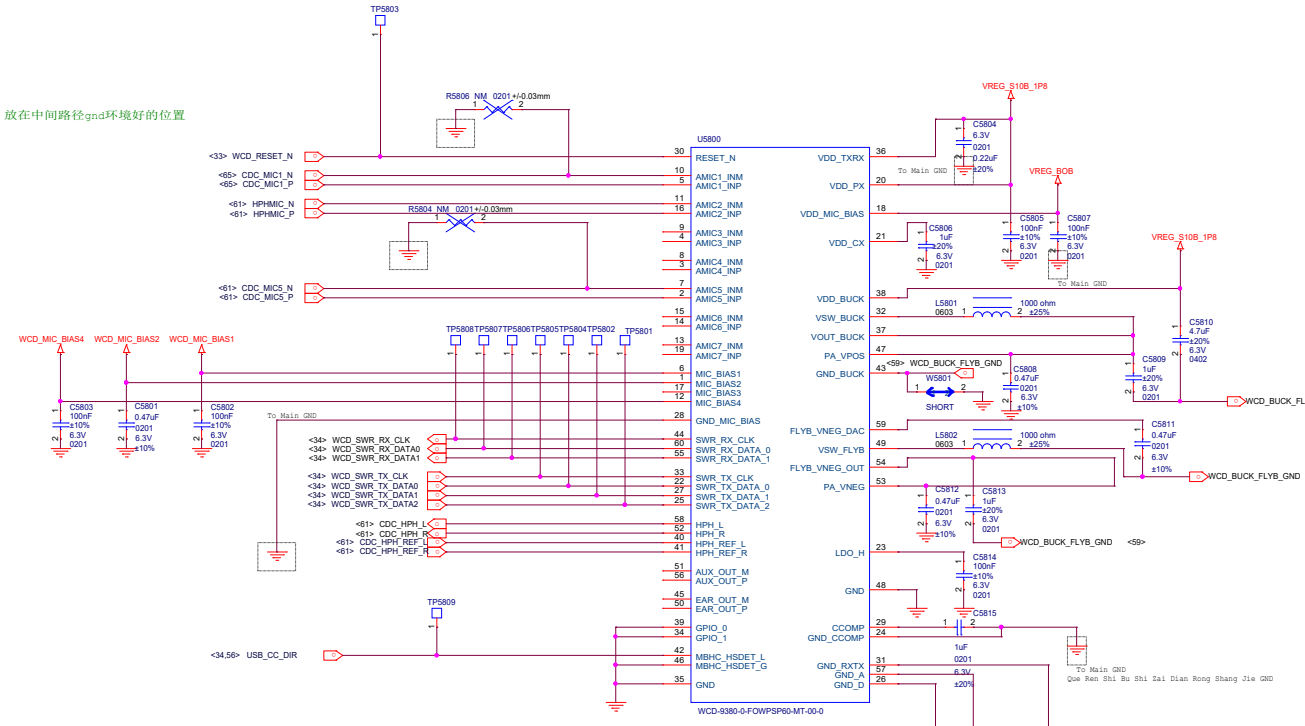

NOTE 1: ROUTE AN ISOLATED GROUND TRACE FROM CCOMP_REF TO THE CAP GROUND, THEN VIA TO THE MAIN GROUND PLANE
NOTE 2: PLACE VDD_BUCK CAP AS CLOSE TO CHIP EDGE AS POSSIBLE AND MINIMIZE LOOP INDUCTANCE
NOTE 3: USE SHORT AND WIDE TRACES FOR BUCK AND FLYBACK RELATED NETS
NOTE 4: ANALOG MIC INPUTS SHOULD BE ISOLATED WITH GROUND FROM NOISY OR SWITCHING SIGNALS AND SUPPLIES

Title	L12_MAIN	
Size A3	Document Number WCD9380	Rev P0
Date: Tuesday, October 11, 2022	Sheet 59 of 78	

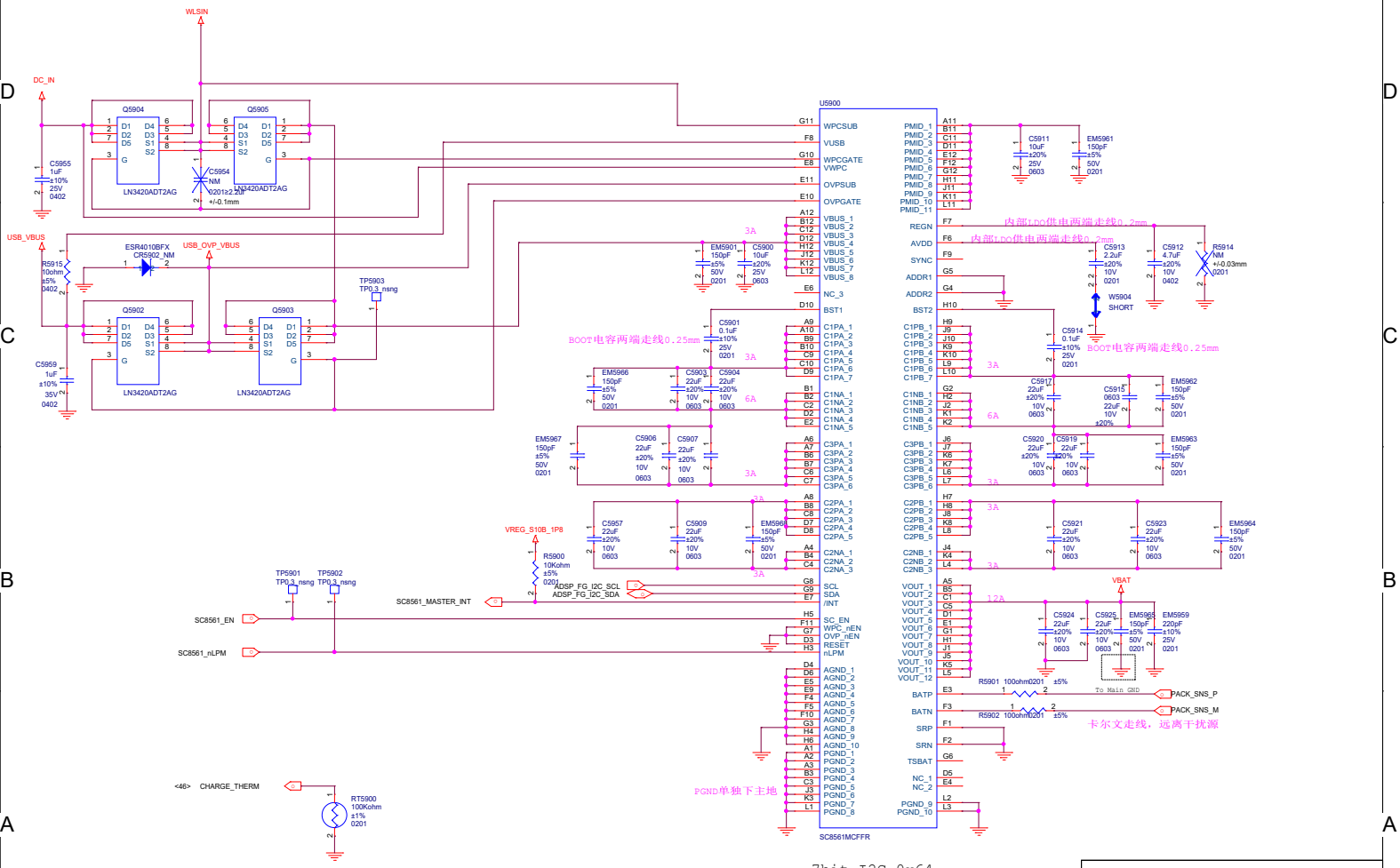

7bit I2C 0x64

Title	DSP5713		
Size A3	Document Number <Doc>		Rev v1.0
Date: Tuesday, October 11, 2022		Sheet 59 of 73	

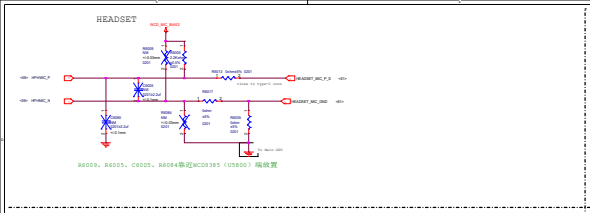
HEADSET
R6009、R6005、C6005、R6084靠近MC09385（USB20）端放置

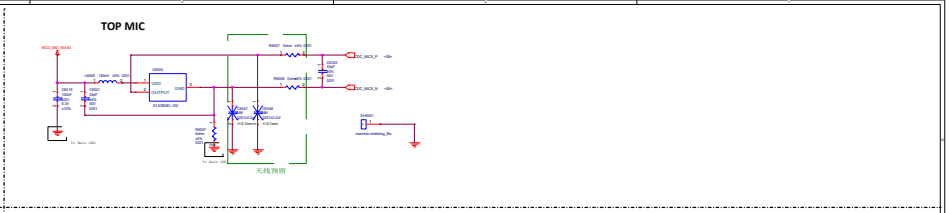
TOP MIC
天线预留

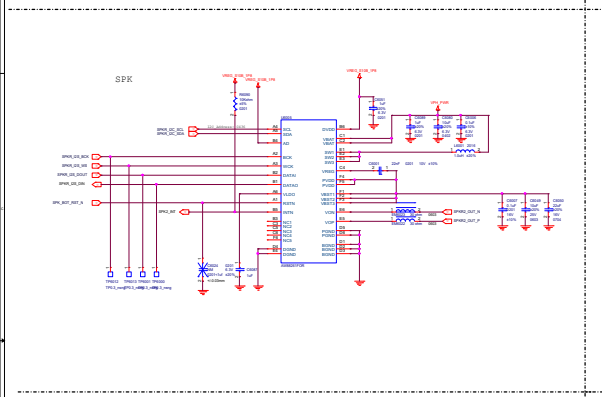
SPK

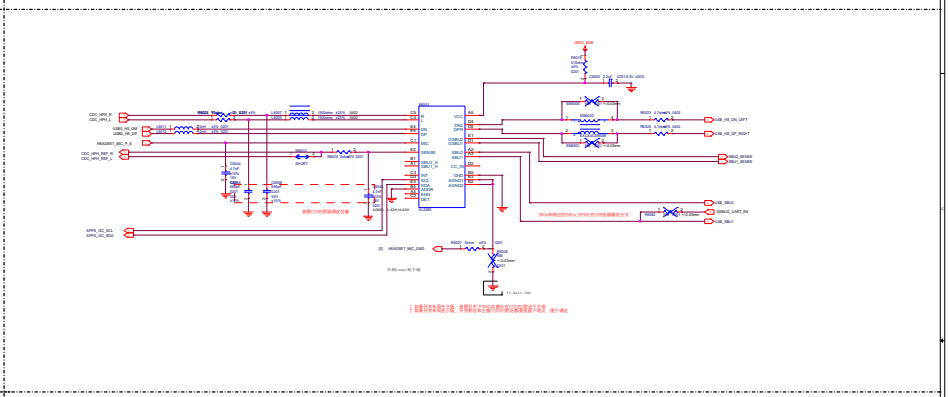

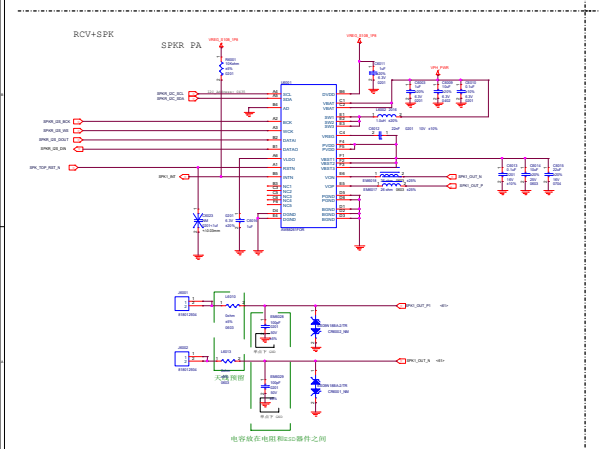
RCV+SPK
SPKR PA
天线预留
电容放在电阻和ESD器件之间

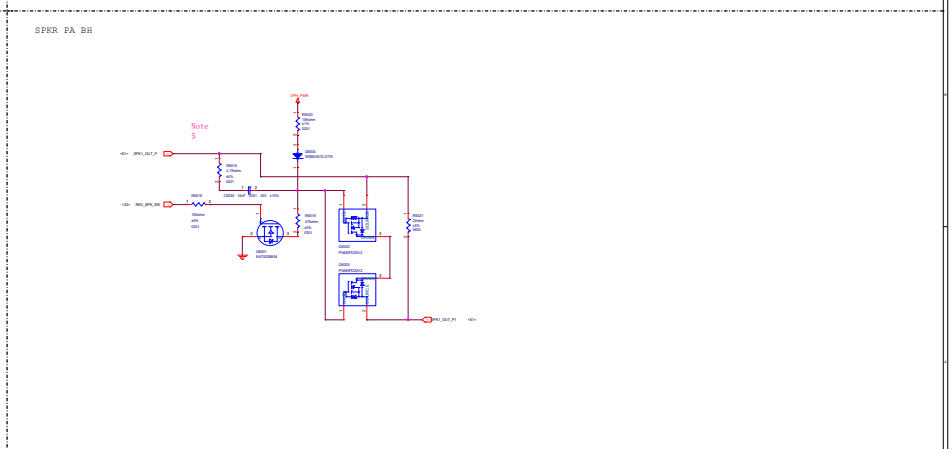
SPKR PA BH

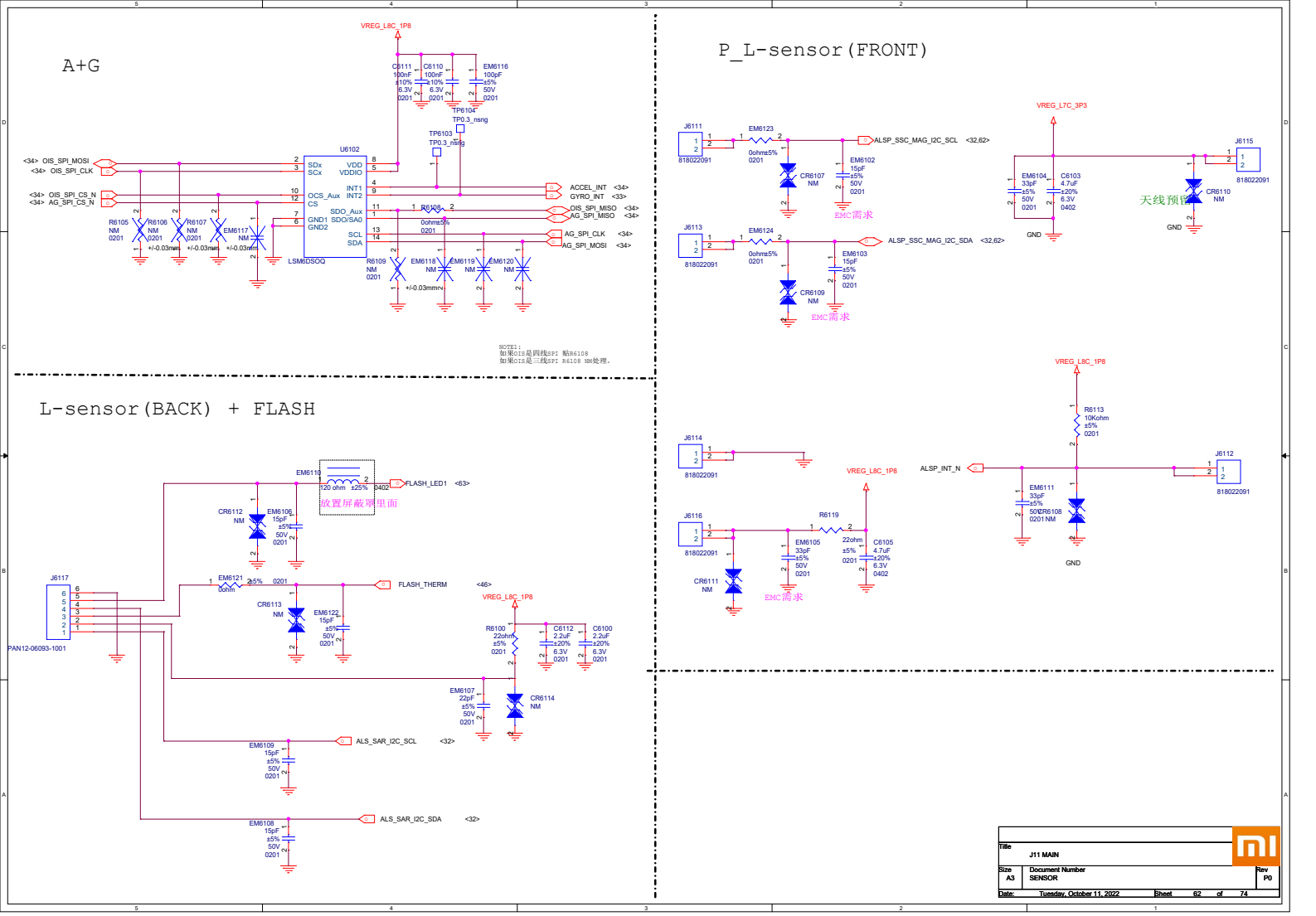
A+G
VREG_L8C_1P8
C6111 100nF ±10% 6.3V 0201
C6110 100nF ±10% 6.3V 0201
EM6116 100pF ±5% 50V 0201
TP6104
TP0.3_nsng
TP6103
TP0.3_nsng
U6102
SDx SCx
VDD VDDIO
INT1 INT2
OCS_Aux CS
SDO_Aux SDO/SA0
GND1 GND2
SCL SDA
LSM6DSOQ
<34> OIS_SPI_MOSI
<34> OIS_SPI_CLK
<34> OIS_SPI_CS_N
<34> AG_SPI_CS_N
R6105 NM 0201
R6106 NM 0201 +/-0.03mm
R6107 NM 0201 +/-0.03mm
EM6117 NM +/-0.03mm
R6108 0ohm±5% 0201
R6109 NM 0201 +/-0.03mm
EM6118 NM
EM6119 NM
EM6120 NM
ACCEL_INT <34>
GYRO_INT <33>
OIS_SPI_MISO <34>
AG_SPI_MISO <34>
AG_SPI_CLK <34>
AG_SPI_MOSI <34>
NOTE1:
如果OIS是四线SPI 贴R6108
如果OIS是三线SPI R6108 NM处理。
P_L-sensor(FRONT)
J6111 818022091
EM6123 0ohm±5% 0201
ALSP_SSC_MAG_I2C_SCL <32,62>
CR6107 NM
EM6102 15pF ±5% 50V 0201
EMC需求
J6113 818022091
EM6124 0ohm±5% 0201
ALSP_SSC_MAG_I2C_SDA <32,62>
CR6109 NM
EM6103 15pF ±5% 50V 0201
EMC需求
VREG_L7C_3P3
EM6104 33pF ±5% 50V 0201
C6103 4.7uF ±20% 6.3V 0402
GND
J6115 818022091
天线预留
CR6110 NM
GND
VREG_L8C_1P8
R6113 10Kohm ±5% 0201
J6114 818022091
ALSP_INT_N
J6112 818022091
EM6111 33pF ±5% 50V 0201
CR6108 NM
GND
VREG_L8C_1P8
J6116 818022091
R6119 22ohm ±5% 0201
EM6105 33pF ±5% 50V 0201
C6105 4.7uF ±20% 6.3V 0402
CR6111 NM
EMC需求
L-sensor(BACK) + FLASH
EM6110 120 ohm ±25% 0402
FLASH_LED1 <63>
放置屏蔽罩里面
CR6112 NM
EM6106 15pF ±5% 50V 0201
J6117 PAN12-06093-1001
EM6121 0ohm ±5% 0201
FLASH_THERM <46>
CR6113 NM
EM6122 15pF ±5% 50V 0201
VREG_L8C_1P8
R6100 22ohm ±5% 0201
C6112 2.2uF ±20% 6.3V 0201
C6100 2.2uF ±20% 6.3V 0201
EM6107 22pF ±5% 50V 0201
CR6114 NM
EM6109 15pF ±5% 50V 0201
ALS_SAR_I2C_SCL <32>
EM6108 15pF ±5% 50V 0201
ALS_SAR_I2C_SDA <32>
Title
J11 MAIN
Size A3
Document Number SENSOR
Rev P0
Date: Tuesday, October 11, 2022
Sheet 62 of 74

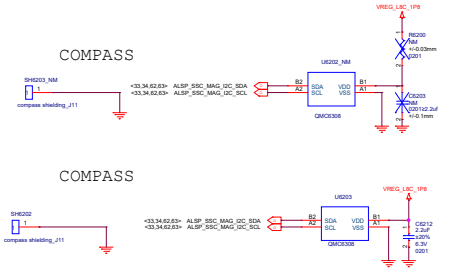

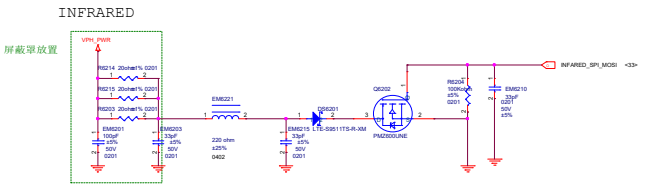

MI PHONE			
Title: MT6873_5GA			
Size: A2	Document Number: SENSOR-2		Rev: P0
Date: Tuesday, October 11, 2022	Sheet 63 of 74		

SIM

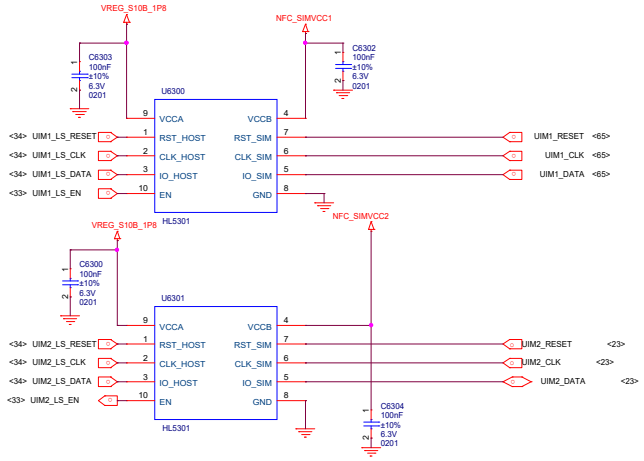

Sidekey

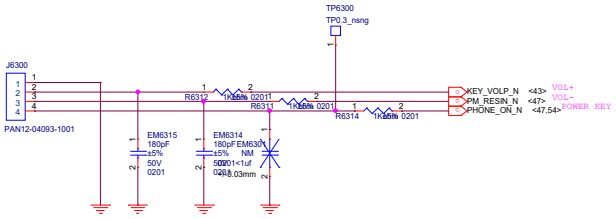

MI PHONE		
Title: MT6873_5GA		
Size: A3	Document Number: SIM CONNECTOR	Rev: P0
Date:	Sheet 64 of 74	

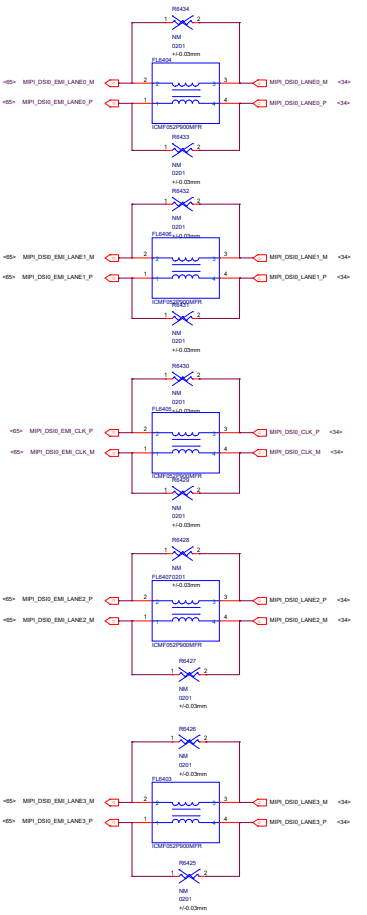

MI PHONE		
Title: MT6873_5GA		
Size: A2	Document Number: AMOLED	Rev: P0
Date: Tuesday, October 11, 2022	Sheet 65 of 74	

WIDE 64M OV64B

0X20(W)/0X21(R)

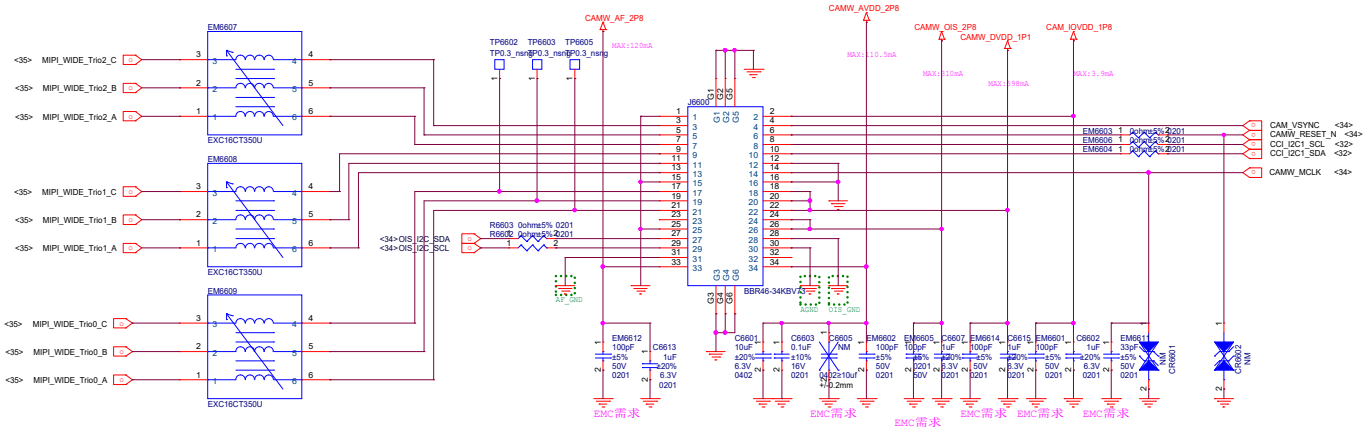

Title	J11 MAIN	
Size A3	Document Number WIDE&TELE CAMERA	Rev P0
Date: Tuesday, October 11, 2022	Sheet 67 of 74	

front 16M OV16A1Q 0X20(W)/0X21(R)

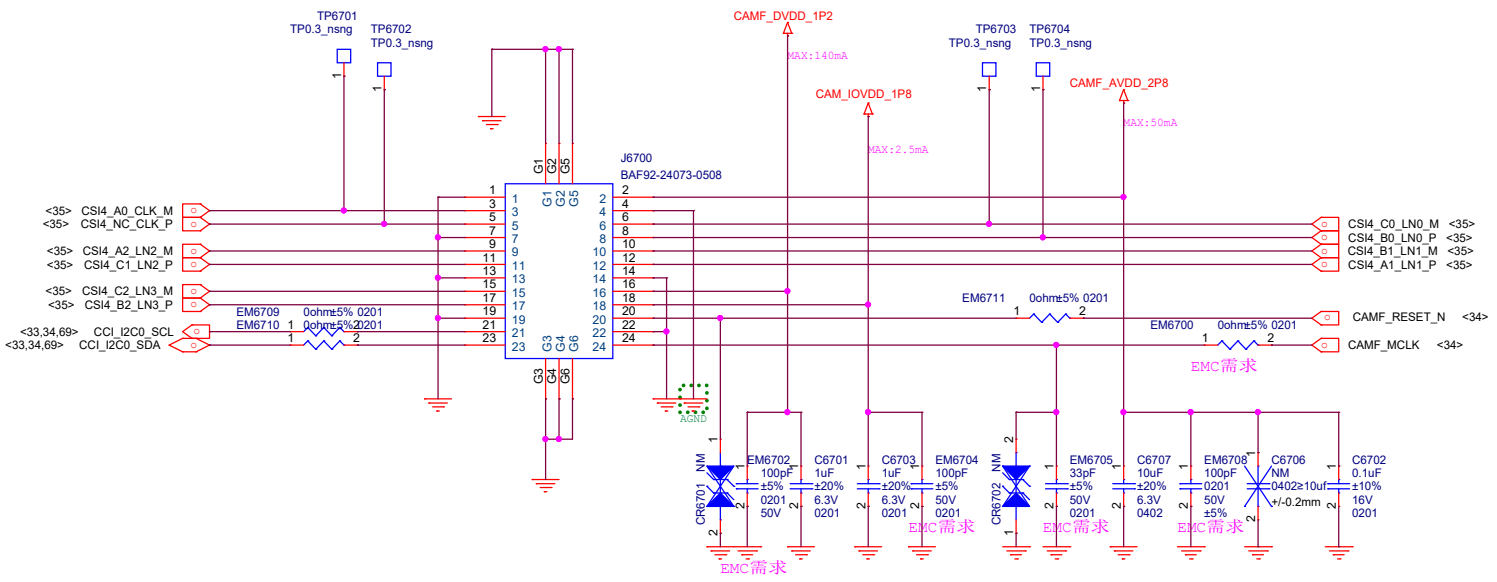

Title	J11 MAIN	
Size A4	Document Number Reserved(for Analog FM)	Rev P0
Date: Tuesday, October 11, 2022	Sheet 68 of 74	

UITRA 1M OV08D10 0X6D(R) 0X6C(W)

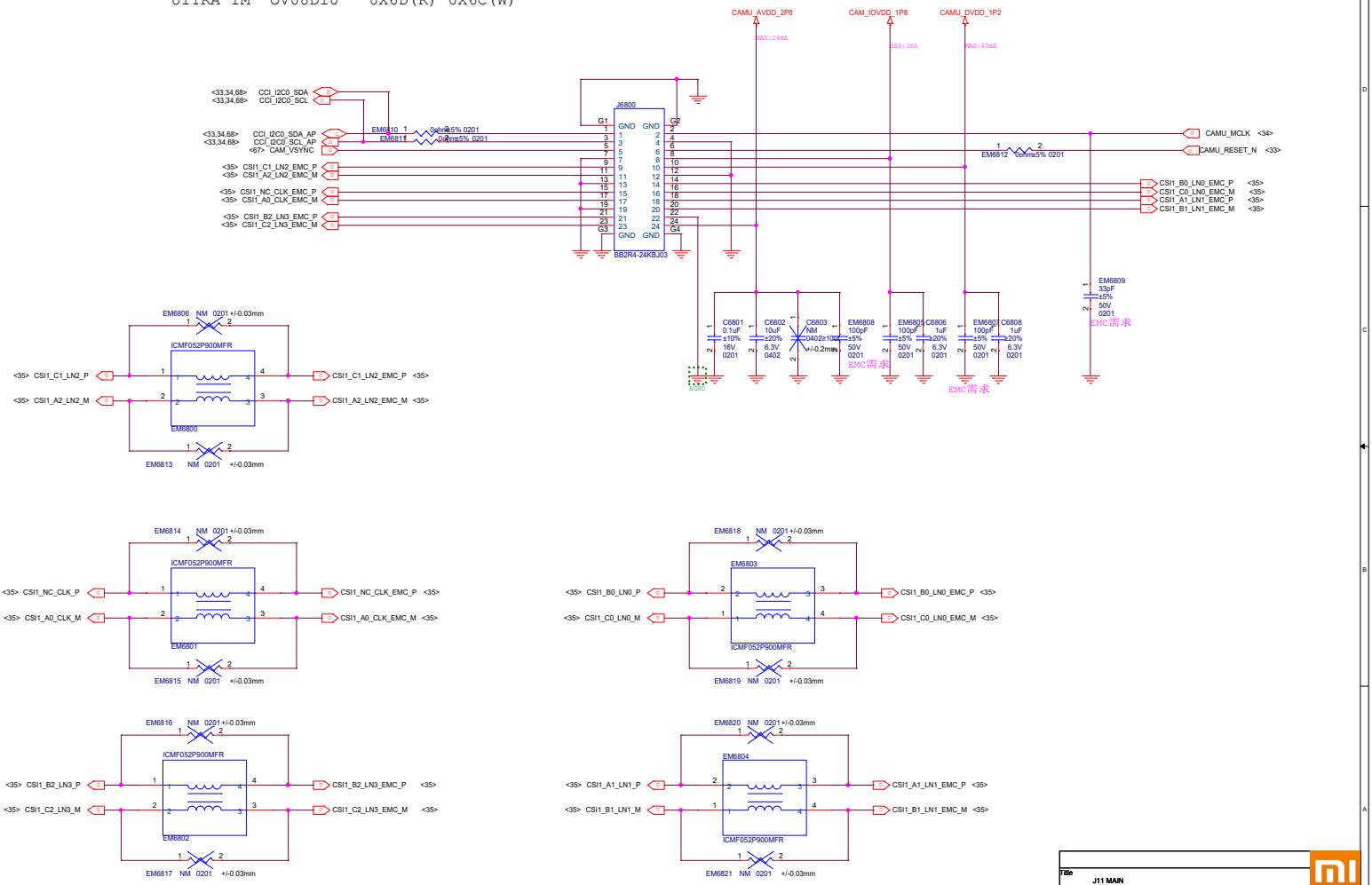

Title	J11 MAIN	
Size A3	Document Number ULTRA CAMERA	Rev P0
Date: Tuesday, October 11, 2022	Sheet 69 of 74	

MACRO 2M OV02B10 0X79(R) 0X78(W)

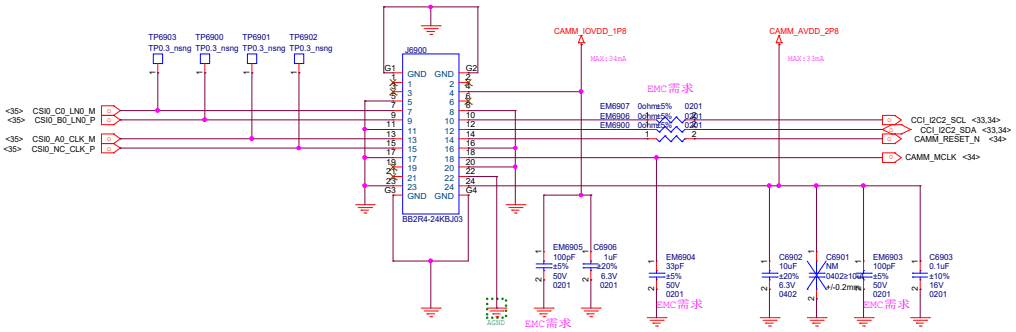

Title	J11 MAIN	
Size A3	Document Number ULTRA CAMERA	Rev P0
Date: Tuesday, October 11, 2022	Sheet 70 of 74	

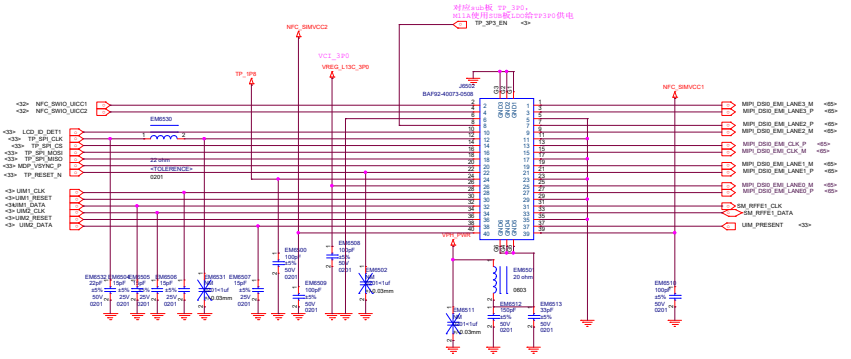

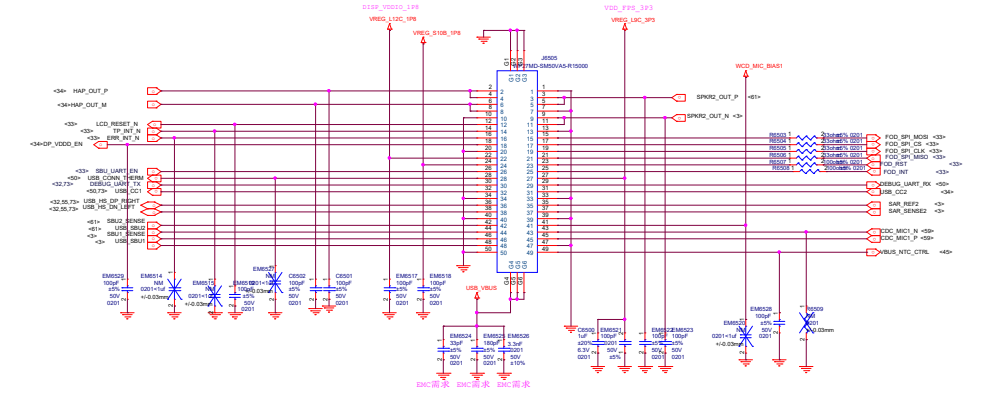

Title:	M10_MAIN		
Size: A2	Document Number: MAIN_BTB		Rev: P0
Date: Tuesday, October 11, 2022		Sheet 71 of 80	

屏蔽罩内放置

WIDE DVDD

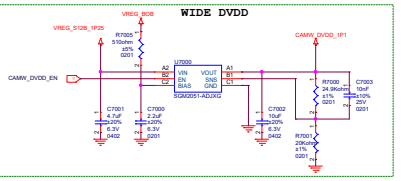

屏蔽罩内放置

WIDE AVDD

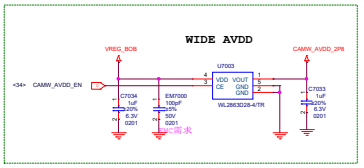

ULTRA AVDD

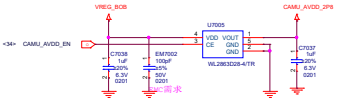

MACRO AVDD

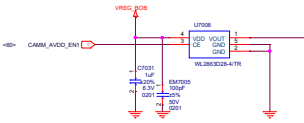

MACRO IOVDD

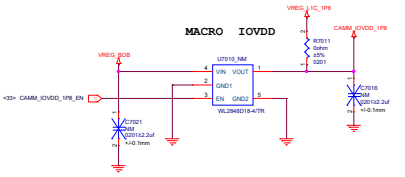

FRONT AVDD

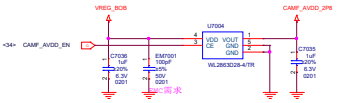

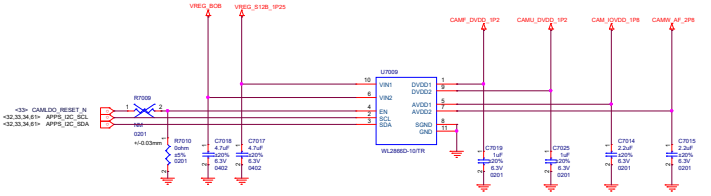

Title:	L12_MAIN		
Size: A2	Document Number: CAMERA LDOs		Rev: P0
Date: Tuesday, October 11, 2022		Sheet 71 of 78	

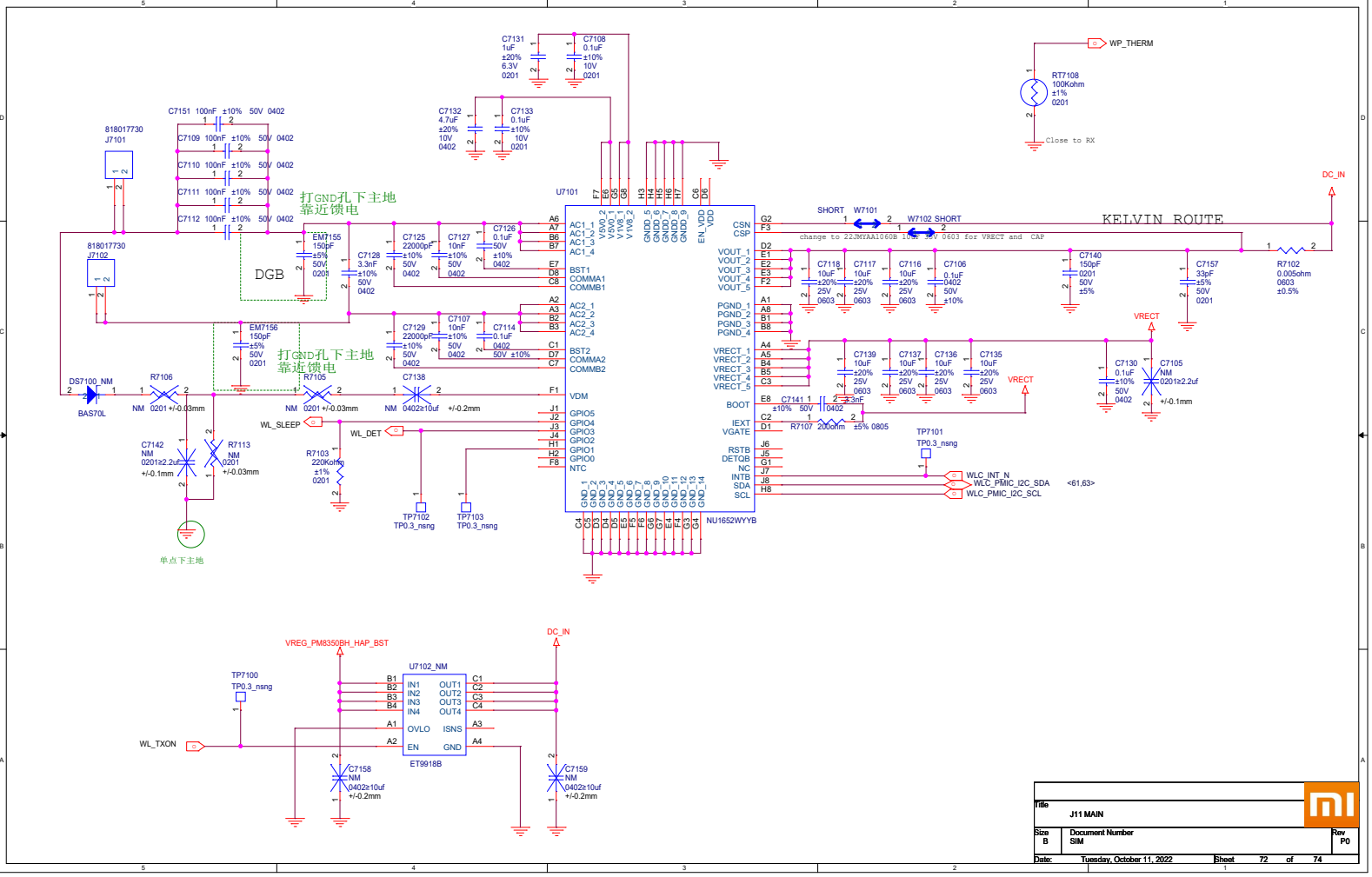

Title	J11 MAIN		
Size B	Document Number SIM		Rev P0
Date: Tuesday, October 11, 2022	Sheet 72 of 74		

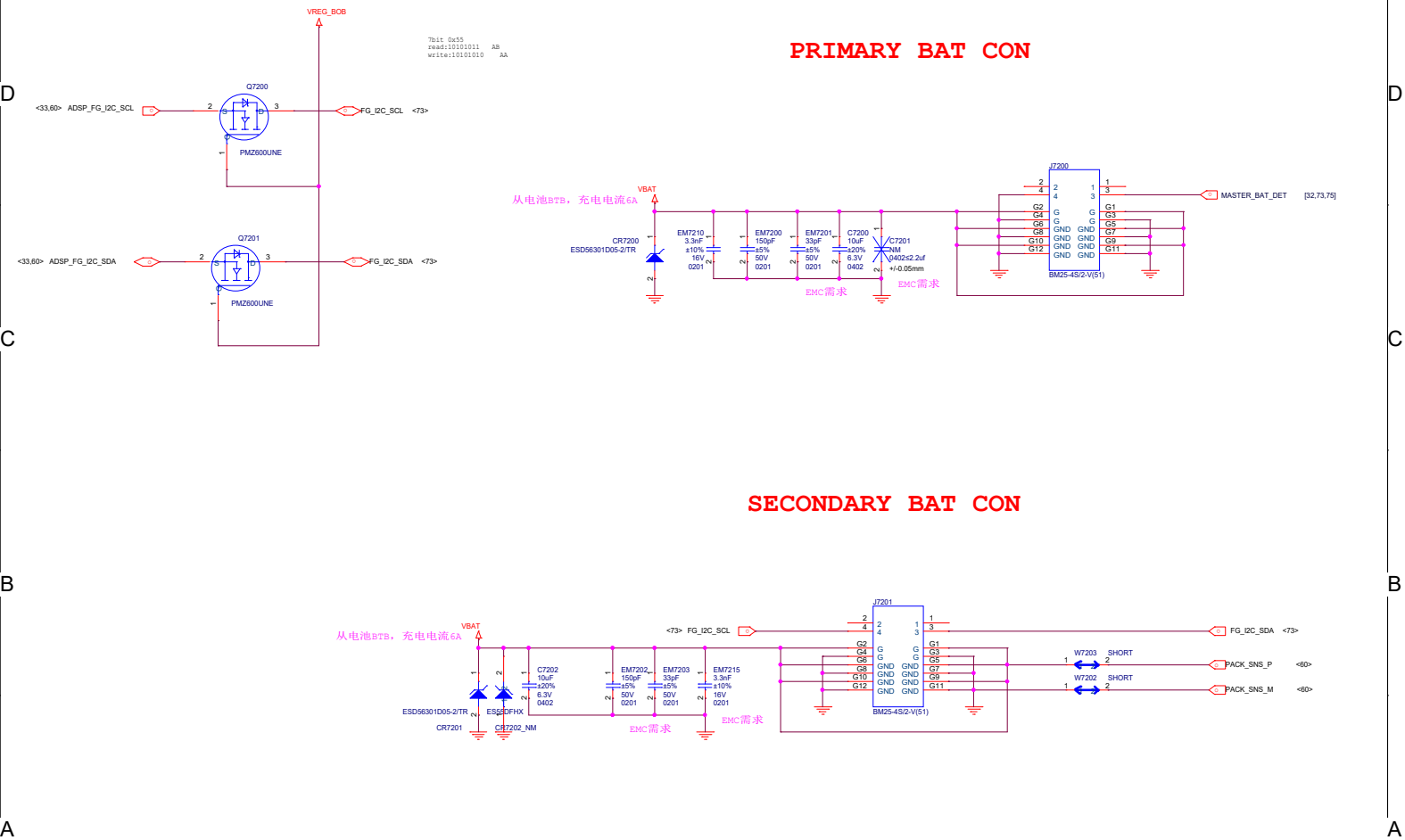

Title	L12_MAIN	
Size A3	Document Number BAT	Rev P0
Date: Tuesday, October 11, 2022	Sheet 73 of 78	

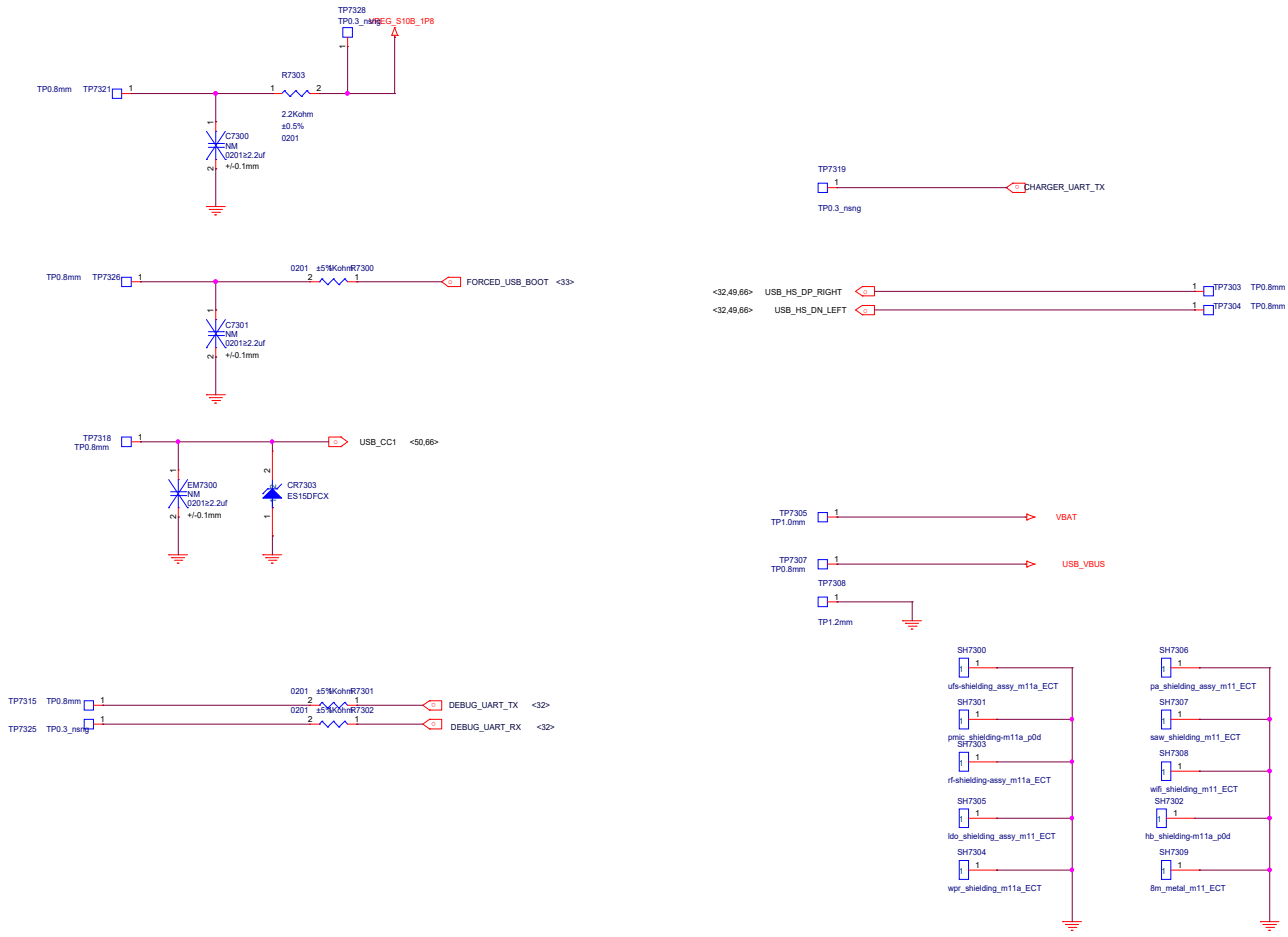

Title	J7 WLED	
Size A3	Document Number <Doc>	Rev P0
Date: Tuesday, October 11, 2022	Sheet 73 of 74	

Title	L12_MAIN
Size A3	Document Number ANT-diversity
Rev	P0
Date:	Tuesday, October 11, 2022
Sheet	75 of 78

Title	L12_MAIN
Size A3	Document Number INTERPOSER PIN
Rev	P0
Date:	Tuesday, October 11, 2022
Sheet	76 of 78

Title	L12_MAIN
Size A3	Document Number LGA PIN
Rev	P0
Date:	Tuesday, October 11, 2022
Sheet	77 of 78

ANT0_LB **ANT_PCB_GND**

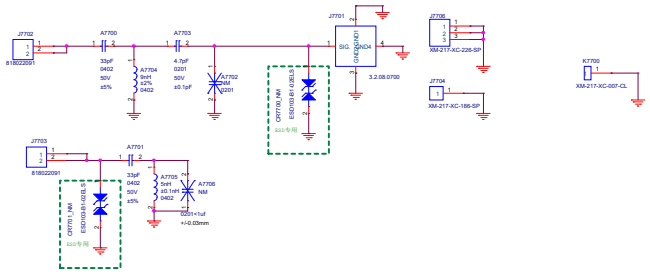

Title	M10_MAIN		
Size: A2	Document Number: ANT PCB		Rev: <RevCode>
Date: Tuesday, October 11, 2022	Sheet 77 of 80		